FINANCE COMMITTEE

DECEMBER 7, 2016

7:00 PM Aldermanic Chamber

ROLL CALL

PUBLIC COMMENT

COMMUNICATIONS

From: Dan Kooken, Purchasing Manager
Re: Award of Contract to Bonnette, Page & Stone for Spit Brook Road Fire Station Addition/Renovation (Value: $213,900); Department: 152 Fire Rescue; Fund: Bond

From: Dan Kooken, Purchasing Manager
Re: Contract for Phase IV Permitting Contract (Value: Not-to-Exceed $300,000); Department: 168 Solid Waste; Fund: Bond; Activity: Landfill Expansion Phase III & IV

From: Dan Kooken, Purchasing Manager
Re: Contract for Phase III Design (Value: Not-to-Exceed $200,000); Department: 168 Solid Waste; Fund: Bond; Activity: Landfill Expansion Phase III & IV

From: Dan Kooken, Purchasing Manager
Re: Purchase of One (1) Pipeline Inspection Camera Van (Value: $78,544); Department: 169 Wastewater; Fund: WERF – Collection Systems

From: Dan Kooken, Purchasing Manager
Re: Purchase of One (1) Pipeline Inspection Camera System (Value: $138,600); Department: 169 Wastewater; Fund: WERF – Collection Systems

From: Dan Kooken, Purchasing Manager
Re: Engineering Services for the Repair of Henri Burque Pedestrian Bridge (Value: $17,107) Department: 160 Admin/Engineering; Fund: Capital; Activity: Bridge Rehabilitation

From: Dan Kooken, Purchasing Manager
Re: Post Construction Phase Management for Broad Street Parkway (Value: Not-to-Exceed $120,000) Department: 160 Admin/Engineering; Fund: Bond; Activity: Broad Street Parkway

UNFINISHED BUSINESS – None

NEW BUSINESS – None

DISCUSSION

RECORD OF EXPENDITURES

PUBLIC COMMENT

NON-PUBLIC SESSION

ADJOURNMENT

THE CITY OF NASHUA

Financial Services

Purchasing Department

"The Gate City"

December 1, 2016
Memo #17-064

TO: MAYOR DONCHESS
FINANCE COMMITTEE

SUBJECT: AWARD OF CONTRACT TO BONNETTE, PAGE & STONE FOR SPIT BROOK ROAD FIRE STATION ADDITION/RENOVATION (VALUE: $213,900)
DEPARTMENT: 152 FIRE RESCUE; FUND: BOND

Please see the attached communication from Fire Chief Steven Galipeau dated November 29, 2016 for information related to this request.

Pursuant to **§ 5-78 Major purchases (greater than $10,000)** A. All supplies and contractual services, except as otherwise provided herein, when the estimated cost thereof shall exceed $10,000 shall be purchased by formal, written contract from the lowest responsible bidder, after due notice inviting bids.

Nashua Fire Rescue and the Purchasing Department recommend the award of this construction manager contract to **Bonnette, Page & Stone** of **Laconia, NH** in the amount of in the amount of $213,900.

Respectfully,

Dan Kooken
Purchasing Manager

Cc: S. Galipeau J. Graziano

229 Main Street • Nashua, New Hampshire 03061 • Phone (603) 589-3330 • Fax (603) 589-3233

Nashua Fire Rescue

Administrative Office
70 East Hollis Street, Nashua, NH 03060
www.nashuafire.com

Steven G. Galipeau
Chief of Department
(603) 594-3651
FAX (603) 594-3654
GalipeauS@Nashuanh.gov

To: Dan Kooken, Purchasing Manager
From: Steven Galipeau, Fire Chief
Date: November 29, 2016
Re: Construction Management Firm

On August 17, 2016, Nashua Fire Rescue presented a draft contract, AIA Document B133 – 2014 with Port One Architects, for approval subject to review by our Legal and Risk Departments. This draft contract was approved by the Finance Committee on that date. In accordance with O-14-011, notice must be made to the Finance Committee regarding any modifications to contracts previously approved by the Finance Committee; therefore, we are resubmitting this contract which has been reviewed by our Legal and Risk Departments and incorporate their final changes.

Attached are the following documents:

AIA Document B133 – 2014 – Standard Form of Agreement Between Owner and Architect – Agreement with Port One Architects, Inc. (document originally presented which is now Final)

AIA Document A133 – 2009 – Standard Form of Agreement Between Owner and Construction Manager as Constructor – Agreement with Bonnette Page & Stone Corporation

AIA Document A201 – 2007 – General Conditions of the Contract for Construction – Agreement with both Port One Architects and Bonnette Page & Stone Corporation (incorporated by reference in both the B133 and A133).

BPS – General Conditions Detail Summary Budget

On August 8th, Nashua Fire Rescue went out to bid under RFP0745-081716 for a Construction Manager for the Addition and Renovations to Fire Station 3 at 124 Spit Brook Road Project. On August 17th, we received six bids from the following firms:

Firm	Location	General Condition and / or Pre-Construction Fees	Construction Manager Fee
Bonnette ,Page & Stone (BPS)	Laconia, NH	$213,900	2.9%
North Branch Construction	Concord, NH	$217,650	4.5%
North Point Construction Management	Hudson, NH	$200,500	4.5%

Eckman Construction	Bedford, NH	$7,500	5.5%
Harvey Construction	Nashua, NH	$5,000	5.5%
Turnstone Corporation	Milford, NH	0	3.5%

Each submission was reviewed by Purchasing and the Fire Department, and the three firms closest to our plan and price range were interviewed (BPS, North Branch Construction, and North Point Construction Management). These three firms were interviewed by Dan Kooken, Purchasing Manager, Kelly Davis, our contracted Architect for the project, and me as the Fire Chief. Each firm had positive qualities and could perform the work needed. As a committee we needed to look further to determine our best possible options.

Both North Branch and BPS have more experience working on an active operating fire station. This point is of the utmost importance as we present a unique work environment for outside contractors. I continued to perform background checks with several Fire Chief's within the State who had worked with these two firms. Each of the Chief's interviewed spoke highly of the firms they had dealt with, including the City of Manchester that has actually used both firms at different times.

The final decision came down to pricing and technology. BPS has embraced new technology within the construction field by incorporating PRO-CORE into their operation. This technology allows real time processing of invoicing, plan changes, meeting note and action items, and also affords the company administrative savings that are passed onto us as the customer by lower CM costs. Of the firms interviewed, BPS was the only firm that spoke to the importance of meeting to discuss logistics and establish a safety plan.

We are seeking approval to award the Construction Manager contract to Bonnette, Page & Stone (BSP) of Laconia, NH, at a rate of 2.9% of the Guaranteed Maximum Price plus $213,900 in General Condition costs. The Guaranteed Maximum Price will be determined at a later date with the Construction Manager and Architect once design and material cost has been finalized.

Cc John Griffin Janet Graziano

Fire Station #3

Nashua, New Hampshire

General Conditions Detail Summary

October 17, 2016

1 GENERAL CONDITIONS BUDGET		BUDGET
General Conditions	The following is based on a 7 month schedule	
1. Building Permits	Assumed by owner in soft costs	0.00
2. Bond Premiums	To be outside general conditions if required	0.00
3. Builders Risk Insurance	By owner, w BPS as additional named	0.00
4. Construction Operations Insurance	Included as part of project fee	0.00
5. Automobile Insurance	Included as part of project fee	0.00
6. Umbella Inusurance coverage	Included as part of CM fee ($ 10 million in coverage)	0.00
7. Additional Insurances Recommended by CM	BPS also carries E & O insurance at no charge to the owner	0.00
8. Labor Burden on General Conditions	Included w/ each respective line item	0.00
9. Project Managers	Assigned to your project	25,000.00
10. Project Superintendent	Assigned to your project full time onsite daily	98,000.00
11. General Supt	Assigned as required	18,600.00
12. Traffic Control	Included w/ site development if required	0.00
13. Project Layout	Included by foreman	1,500.00
14. Project Layout Equipment	By CM w/ above	0.00
15. Project Safety		1,500.00
16. Trucking / Travel Expenses		16,000.00
17. Office Trailer / supplies		7,000.00
18. Temporary Storage Trailer	w/ above	0.00
19. Temporary Chemical Toilets		1,500.00
20.Temporary Phones / IT		2,500.00
21. Temporary Light	Temp lighting by electrical subcontractor	0.00
22. Temporary Power Costs	Use existing facilities by owner	0.00
23. Temporary Heat	Use existing facilities by owner	0.00
24. Temporary Heat Equipment	N/A	0.00
25. Temporary Enclosures	To be included with demolition division as required	0.00
26. Winter Conditions / Protection Allowance	N/A	0.00
27. Temporary Water & Sewer	N/A	0.00
28. Snow Removal Allowance	N/A	0.00
29. Field Office Supplies		500.00
30. Final Cleaning	To be competitively bid as a subcontract	0.00
31. Record Drawings		500.00
32. Equipment Rental / Small Tools		17,500.00
33. Medical	All BPS foreman are CPR/First Aid trained and certified	300.00
34. Plans & Copy		1,000.00
35. Project Signage		2,500.00
36. Dumpsters, disposal and daily cleanup		20,000.00
General Conditions Summary Sub Total		213,900.00

The above general conditions is for an assumed 7 month construction timeline and does not reflect overtime should it be required .

BPS would be willing to review fixing the general conditions at establishment of the GMP

AIA® Document B133™ – 2014

Standard Form of Agreement Between Owner and Architect, Construction Manager as Constructor Edition

AGREEMENT made as of the day of November in the year 2016
(In words, indicate day, month and year.)

BETWEEN the Architect's client identified as the Owner:
(Name, legal status, address and other information)

City of Nashua New Hampshire
229 Main Street
Nashua, New Hampshire 03060

and the Architect:
(Name, legal status, address and other information)

Port One Architects Inc.
959 Islington Street
Portsmouth New Hampshire 03801

for the following Project:
(Name, location and detailed description)

Nashua Fire Department
Station 3
124 Spit Brook Road
Nashua, New Hampshire 03060

Miscellaneous renovations to approximately 6575 sf of existing space and construction of approximately 2975 sf of a new apparatus bay addition on two levels.

The Construction Manager (if known):
(Name, legal status, address and other information)

Bonnette, Page & Stone Corp.
91 Bisson Avenue
Laconia, New Hampshire 03246

The Owner and Architect agree as follows.

ADDITIONS AND DELETIONS:
The author of this document has added information needed for its completion. The author may also have revised the text of the original AIA standard form. An *Additions and Deletions Report* that notes added information as well as revisions to the standard form text is available from the author and should be reviewed. A vertical line in the left margin of this document indicates where the author has added necessary information and where the author has added to or deleted from the original AIA text.

This document has important legal consequences. Consultation with an attorney is encouraged with respect to its completion or modification.

This document is intended to be used in conjunction with AIA Documents A201™–2007, General Conditions of the Contract for Construction; A133™–2009 Standard Form of Agreement Between Owner and Construction Manager as Constructor where the basis of payment is the Cost of the Work Plus a Fee with a Guaranteed Maximum Price; and A134™–2009 Standard Form of Agreement Between Owner and Construction Manager as Constructor where the basis of payment is the Cost of the Work Plus a Fee without a Guaranteed Maximum Price.

AIA Document A201™–2007 is adopted in this document by reference. Do not use with other general conditions unless this document is modified.

Init.
/
AIA Document B133™ – 2014. Copyright © 2014 by The American Institute of Architects. All rights reserved. WARNING: This AIA® Document is protected by U.S. Copyright Law and International Treaties. Unauthorized reproduction or distribution of this AIA® Document, or any portion of it, may result in severe civil and criminal penalties, and will be prosecuted to the maximum extent possible under the law. This document was produced by AIA software at 09:28:04 on 11/11/2016 under Order No.1575871642_1 which expires on 02/08/2017, and is not for resale.
User Notes: (1482978134)

TABLE OF ARTICLES

1 INITIAL INFORMATION

2 ARCHITECT'S RESPONSIBILITIES

3 SCOPE OF ARCHITECT'S BASIC SERVICES

4 ADDITIONAL SERVICES

5 OWNER'S RESPONSIBILITIES

6 COST OF THE WORK

7 COPYRIGHTS AND LICENSES

8 CLAIMS AND DISPUTES

9 TERMINATION OR SUSPENSION

10 MISCELLANEOUS PROVISIONS

11 COMPENSATION

12 SPECIAL TERMS AND CONDITIONS

13 SCOPE OF THE AGREEMENT

ARTICLE 1 INITIAL INFORMATION

§ 1.1 This Agreement is based on the Initial Information set forth in this Section 1.1.
(Note the disposition for the following items by inserting the requested information or a statement such as "not applicable," "unknown at time of execution," or "to be determined later by mutual agreement.")

§ 1.1.1 The Owner's program for the Project:
(Identify documentation or state the manner in which the program will be developed.)

The Owner's program is complete, having been developed in meetings between the Architect and the Fire Department.

§ 1.1.2 The Project's physical characteristics:
(Identify or describe, if appropriate, size, location, dimensions, or other pertinent information, such as geotechnical reports; site, boundary and topographic surveys; traffic and utility studies; availability of public and private utilities and services; legal description of the site; etc.)

The existing fire station site is approximately 90,800 sf, sloping toward the northwest. A geotechnical report was prepared by Geotechnical Services Inc., Weare, NH, under contract with the City of Nashua. Site boundary and topographic survey was prepared by Hayner/Swanson Inc., Nashua, NH, under contract with the City of Nashua. An architectural site plan was prepared by Port One Architects, Inc., Portsmouth, NH, and was submitted to the Nashua Planning Department.

§ 1.1.3 The Owner's budget for the Cost of the Work, as defined in Section 6.1:
(Provide total and, if known, a line item breakdown.)

$ 1,550,000

§ 1.1.4 The Owner's anticipated design and construction schedule:

.1 Design phase milestone dates, if any:

Init. / AIA Document B133™ – 2014. Copyright © 2014 by The American Institute of Architects. All rights reserved. WARNING: This AIA® Document is protected by U.S. Copyright Law and International Treaties. Unauthorized reproduction or distribution of this AIA® Document, or any portion of it, may result in severe civil and criminal penalties, and will be prosecuted to the maximum extent possible under the law. This document was produced by AIA software at 09:28:04 on 11/11/2016 under Order No.1575871642_1 which expires on 02/08/2017, and is not for resale.
User Notes: (1482978134)

April 2017 proposed completion date

.2 Commencement of construction:

June 2017 proposed commencement date

.3 Substantial Completion date or milestone dates:

January 2018 proposed completion date

.4 Other:
Contract approval by the City of Nashua Aldermanic Finance Committee was required.

§ 1.1.5 The Owner intends to retain a Construction Manager pursuant to the following agreement:
(Indicate agreement type.)

[X] AIA Document A133–2009, Standard Form of Agreement Between Owner and Construction Manager as Constructor where the basis of payment is the Cost of the Work Plus a Fee with a Guaranteed Maximum Price.

[ ] AIA Document A134–2009, Standard Form of Agreement Between Owner and Construction Manager as Constructor where the basis of payment is the Cost of the Work Plus a Fee without a Guaranteed Maximum Price.

§ 1.1.6 The Owner's requirements for accelerated or fast-track scheduling or phased construction are set forth below:
(List number and type of bid/procurement packages.)

N/A

§ 1.1.7 Other Project information:
(Identify special characteristics or needs of the Project not provided elsewhere, such as the Owner's sustainable objective, if any, or historic preservation requirements.)

The renovations and addition construction will be taking place in an active fire station. Care must be taken to not unduly or unreasonably interfere with the fire station's operations.

§ 1.1.8 The Owner identifies the following representative in accordance with Section 5.5:
(List name, address and other information.)

Chief Steven G. Galipeau
Assistant Chief Brian D. Rhodes
Nashua Fire Department
70 East Hollis Street
Nashua, NH 03060
1-603-594-3651

§ 1.1.9 The persons or entities, in addition to the Owner's representative, who are required to review the Architect's submittals to the Owner are as follows:
(List name, address and other information.)

N/A

§ 1.1.10 The Owner will retain the following consultants:
(List name, legal status, address and other information.)

.1 Construction Manager:

Init. /

AIA Document B133™ – 2014. Copyright © 2014 by The American Institute of Architects. All rights reserved. WARNING: This AIA® Document is protected by U.S. Copyright Law and International Treaties. Unauthorized reproduction or distribution of this AIA® Document, or any portion of it, may result in severe civil and criminal penalties, and will be prosecuted to the maximum extent possible under the law. This document was produced by AIA software at 09:28:04 on 11/11/2016 under Order No.1575871642_1 which expires on 02/08/2017, and is not for resale.
User Notes: (1482978134)

(The Construction Manager is identified on the cover page. If a Construction Manager has not been retained as of the date of this Agreement, state the anticipated date of retention. If the Architect is to assist the Owner in selecting the Construction Manager, complete Section 4.1.1)

Construction Manager's Contract to be reviewed at the November 2016 Aldermanic Finance Committee meeting.

.2 Cost Consultant (if in addition to the Construction Manager):
(If a Cost Consultant is retained, appropriate references to the Cost Consultant should be inserted in Sections 3.3.6, 3.3.7, 3.4.2, 3.4.3, 3.5.4, 3.5.5, 5.4, 6.3, 6.3.1, 6.4 and 11.6.)

N/A

.3 Land Surveyor:

Hayner Swanson Inc.
3 Congress Street
Nashua, NH 03062
1-603-883-2057
Paul Hayner PE

.4 Geotechnical Engineer:

Geotechnical Services Inc.
55 North Stark Highway
Weare, NH 03281
1-603-529-7766
Harry K. Wetherbee PE

.5 Environmental Consultant:

Axiom Partners Inc.
545 Salem Street
Wakefield, MA 01880
1-603-498-5005
Randall Ames
Hazardous Building Materials Survey Report – March 24, 2016

.6 Other consultants:
(List any other consultants retained by the Owner, such as a Project or Program Manager, or scheduling consultant.)

N/A

§ 1.1.11 The Architect identifies the following representative in accordance with Section 2.3:
(List name, address and other information.)

William K. Davis AIA
Port One Architects Inc.
959 Islington Street
Portsmouth, NH 03801
1-603-436-8891

§ 1.1.12 The Architect will retain the consultants identified in Sections 1.1.12.1 and 1.1.12.2:
(List name, legal status, address and other information.)

Init.
/
AIA Document B133™ – 2014. Copyright © 2014 by The American Institute of Architects. All rights reserved. WARNING: This AIA® Document is protected by U.S. Copyright Law and International Treaties. Unauthorized reproduction or distribution of this AIA® Document, or any portion of it, may result in severe civil and criminal penalties, and will be prosecuted to the maximum extent possible under the law. This document was produced by AIA software at 09:28:04 on 11/11/2016 under Order No.1575871642_1 which expires on 02/08/2017, and is not for resale.
User Notes:

(1482978134)

§ **1.1.12.1** Consultants retained under Basic Services:

.1 Structural Engineer:

Summit Engineering Inc.
111 Maplewood Avenue
Portsmouth, NH 03801
1-603-319-1817
Bob Champagne PE

.2 Mechanical Engineer:

Yeaton Associates Inc.
66 Jackson Hill Street
Littleton. NH 03561
1-603-444-6578
Wayne Fillion PE

.3 Electrical Engineer:

Yeaton Associates Inc.
66 Jackson Hill Street
Littleton, NH 03561
1-603-444-6578
Wayne Fillion P.E.

§ **1.1.12.2** Consultants retained under Additional Services:

N/A

§ **1.1.13** Other Initial Information on which the Agreement is based:

N/A

§ **1.2** The Owner and Architect may rely on the Initial Information. Both parties, however, recognize that such information may materially change and, in that event, the Owner and the Architect shall appropriately adjust the schedule, and may appropriately adjust the Architect's services and the Architect's compensation.

ARTICLE 2 ARCHITECT'S RESPONSIBILITIES

§ **2.1** The Architect shall provide the professional services as set forth in this Agreement.

§ **2.2** The Architect shall perform its services consistent with the professional skill and care ordinarily provided by architects practicing in the same or similar region under the same or similar circumstances. The Architect shall perform its services as expeditiously as is consistent with such professional skill and care and the orderly progress of the Project. The Architect shall notify the Owner in a prompt and timely manner of any discovered discrepancies, inconsistencies or missing information necessary to provide reasonably accurate and complete documents. Any design, drawings or specifications prepared or furnished by the Architect that contain errors, conflicts or omissions will be promptly corrected by the Architect at no additional cost to the Owner. The Owner's approval, acceptance, use of or payment for all or any part of the Architect's services shall in no way alter the Architect's obligations or the Owner's rights hereunder.

§ **2.3** The Architect shall provide its services in conjunction with the services of a Construction Manager as described in the agreement identified in Section 1.1.5. The Architect shall not be responsible for actions taken by the Construction Manager.

AIA Document B133™ – 2014. Copyright © 2014 by The American Institute of Architects. All rights reserved. WARNING: This AIA® Document is protected by U.S. Copyright Law and International Treaties. Unauthorized reproduction or distribution of this AIA® Document, or any portion of it, may result in severe civil and criminal penalties, and will be prosecuted to the maximum extent possible under the law. This document was produced by AIA software at 09:28:04 on 11/11/2016 under Order No.1575871642_1 which expires on 02/08/2017, and is not for resale.
User Notes: (1482978134)

§ 2.4 The Architect's representative identified in Section 1.1.11 above shall be authorized to act on behalf of the Architect with respect to the Project. The Architect shall not change the designated representative without the Owner's written consent, which such consent the Owner shall not unreasonably withhold.

§ 2.4.1 The Architect shall not change its Consultants identified in Section 1.1.12 above without the Owner's written consent, which such consent the Owner shall not unreasonably withhold.

§ 2.5 Except with the Owner's knowledge and consent, the Architect shall not engage in any activity, or accept any employment, interest or contribution that would reasonably appear to compromise the Architect's professional judgment with respect to this Project.

§ 2.6 Insurance. The Architect shall maintain the following insurance for the duration of this Agreement.

§ 2.6.1 Commercial General Liability with policy limits of not less than One Million Dollars ($ 1,000,000) for each occurrence and Two Million Dollars ($ $ 2,000,000) in the aggregate for bodily injury and property damage.

§ 2.6.2 Automobile Liability covering vehicles owned by the Architect and non-owned vehicles used by the Architect with policy limits of not less than One Million Dollars ($ 1,000,000) per claim and One Million Dollars ($ 1,000,000) in the aggregate for bodily injury and property damage along with any other statutorily required automobile coverage.

§ 2.6.3 The Architect may achieve the required limits and coverage for Commercial General Liability and Automobile Liability through a combination of primary and excess liability insurance, provided such primary and excess insurance policies result in the same or greater coverage as those required under Sections 2.6.1 and 2.6.2.

§ 2.6.4 Workers' Compensation at statutory limits and Employers Liability with policy limits of not less than One Million Dollars ($ 1,000,000).

§ 2.6.5 Professional Liability covering negligent acts, errors and omissions in the performance of professional services, with policy limits of not less than Two Million Dollars ($ 2,000,000) per claim and Two Million Dollars ($ 2,000,000) in the aggregate.

§ 2.6.6 The Owner shall be an additional insured on the Architect's primary and excess insurance policies for Commercial General Liability and Automobile Liability. The additional insured coverage shall be primary and non-contributory to any of the Owner's insurance policies. The additional insured coverage shall apply to both ongoing operations and completed operations.

§ 2.6.7 The Architect shall provide to the Owner certificates of insurance evidencing compliance with the requirements in this Section 2.6. The certificates will show the Owner as additional insureds on the Commercial General Liability, Automobile Liability, and any excess policies.

§ 2.6.8 None of the insurance requirements as to the types and limits to be maintained by the Architect are intended to and shall not in any manner limit or qualify the liabilities and obligations assumed by the Architect under this contract. The Owner shall not maintain any insurance on behalf of the Architect. Subcontractors of the Architect are subject to the same insurance requirements as the Architect and it shall be the Architect's responsibility to ensure compliance of this requirement.

§ 2.7 Third Party Indemnification. Without limitation and notwithstanding any provisions in this Agreement, the Architect shall indemnify and hold harmless the Indemnitees for and against claims, damages, losses and expenses (including reasonable attorneys' fees) asserted by a third party against the Indemnitee arising out of or resulting from negligent acts or omissions of the Architect, a consultant, anyone directly employed by them, or anyone for whose acts they may be liable. The Architect shall not be required to indemnify an Indemnitee to the extent Indemnitee's damages result from the Indemnitee's own negligence. Such obligation shall not be construed to negate, abridge, or reduce any other rights, including any obligations of indemnity, which would otherwise exist as to a party or person described in this Section 2.7. As used in this paragraph, "Indemnitee" means the City of Nashua, its officers, agents and employees.

Init.

/

AIA Document B133™ – 2014. Copyright © 2014 by The American Institute of Architects. All rights reserved. WARNING: This AIA® Document is protected by U.S. Copyright Law and International Treaties. Unauthorized reproduction or distribution of this AIA® Document, or any portion of it, may result in severe civil and criminal penalties, and will be prosecuted to the maximum extent possible under the law. This document was produced by AIA software at 09:28:04 on 11/11/2016 under Order No.1575871642_1 which expires on 02/08/2017, and is not for resale.
User Notes:

(1482978134)

§ 2.8 Decision By The Architect
Any reference in the Contract Documents to the Architect taking action or rendering a decision within a "reasonable time" or with "reasonable promptness" is understood to mean no more than fourteen (14) calendar days, unless otherwise specified in the Contract Documents.

ARTICLE 3 SCOPE OF ARCHITECT'S BASIC SERVICES

§ 3.1 The Architect's Basic Services consist of those described in Article 3 and those services identified elsewhere in this Agreement as Basic Services. The Architect's Basic Services include usual and customary structural, mechanical, and electrical engineering services. Services not set forth in this Article 3 or identified elsewhere in this Agreement as Basic Services are Additional Services.

§ 3.1.1 The Architect shall manage the Architect's services, consult with the Owner and the Construction Manager, research applicable design criteria, attend Project meetings, communicate with members of the Project team and report progress to the Owner.

§ 3.1.2 The Architect shall coordinate its services with those services provided by the Owner, the Construction Manager, and the Owner's consultants. The Architect shall be entitled to rely on the accuracy and completeness of services and information furnished by the Owner, the Construction Manager, and the Owner's consultants. The Architect shall provide prompt written notice to the Owner if the Architect becomes aware of any error, omission or inconsistency in such services or information.

§ 3.1.3 As soon as practicable after the date of this Agreement, but no later than fifteen (15) calendar days after the execution of this Agreement, the Architect shall submit to the Owner and the Construction Manager a schedule of the Architect's services for inclusion in the Project schedule prepared by the Construction Manager. The schedule of the Architect's services shall include design milestone dates, anticipated dates when cost estimates or design reviews may occur, and allowances for periods of time required (1) for the Owner's review, (2) for the Construction Manager's review, (3) for the performance of the Construction Manager's Preconstruction Phase services, (4) for the performance of the Owner's consultants, and (5) for approval of submissions by authorities having jurisdiction over the Project.

§ 3.1.4 The Architect shall submit information to the Construction Manager and participate in developing and revising the Project schedule as it relates to the Architect's services. The Architect shall review and approve, or take other appropriate action upon, the portion of the Project schedule relating to the performance of the Architect's services.

§ 3.1.5 Once the Owner, Construction Manager, and Architect agree to the time limits established by the Project schedule, the Owner and Architect shall not exceed them, except for reasonable cause.

§ 3.1.6 The Architect shall not be responsible for an Owner's directive or substitution, or for the Owner's acceptance of non-conforming work, made without the Architect's approval.

§ 3.1.7 The Architect shall, at appropriate times, in coordination with the Construction Manager, contact the governmental authorities required to approve the Construction Documents and the entities providing utility services to the Project. In designing the Project, the Architect shall respond to applicable design requirements imposed by such governmental authorities and by such entities providing utility services.

§ 3.1.8 The Architect shall assist the Owner and Construction Manager in connection with the Owner's responsibility for filing documents required for the approval of governmental authorities having jurisdiction over the Project.

§ 3.1.9 The Architect's Basic Services include the following:

§ 3.1.9.1 Consistent with Section 5.6 the Architect shall review and evaluate the information provided by the Owner and advise the Owner of any additional information required by the Architect for completion of the Project.

AIA Document B133™ – 2014. Copyright © 2014 by The American Institute of Architects. All rights reserved. WARNING: This AIA® Document is protected by U.S. Copyright Law and International Treaties. Unauthorized reproduction or distribution of this AIA® Document, or any portion of it, may result in severe civil and criminal penalties, and will be prosecuted to the maximum extent possible under the law. This document was produced by AIA software at 09:28:04 on 11/11/2016 under Order No.1575871642_1 which expires on 02/08/2017, and is not for resale.
User Notes:

(1482978134)

§ 3.1.9.3 The Architect shall provide the Owner with Record Plans, as required in Section 3.6.6.6 showing any significant changes in the work made during construction based on information and data furnished by the Construction Manager to the Architect.

§ 3.1.9.4 The Architect shall prepare, on behalf of the Owner, applications and supporting documentation for all design-related and land-use permits, variances and approvals required by state and local governmental authorities having jurisdiction over this Project. The Architect shall revise applications and supporting documentation as required to resolve comments received from such governmental authorities, provided however that: (1) The Architect's appearance as an expert, as well as the preparation of special drawings, visual aids and other materials and design work prepared solely for an appearance before local zoning boards or planning commissions shall be considered an Additional Service; and, (2) Specialized permits, such as, but not limited to, permits required by Federal agencies are not within the scope of Basic Services.

§ 3.1.9.5 The Architect shall prepare and distribute conference memoranda, documentation of site visits and inspection reports as required by the Owner to maintain a comprehensive record of the Project.

§ 3.2 Evaluation of the Construction Manager's Guaranteed Maximum Price Proposal or Control Estimate

§ 3.2.1 Prior to the Owner's acceptance of the Guaranteed Maximum Price proposal or Control Estimate, as applicable, the Architect shall consider the Construction Manager's requests for substitutions and, upon written request of the Construction Manager, provide clarification or interpretations pertaining to the Drawings, Specifications, and other documents submitted by the Architect. The Architect and Construction Manager shall include the Owner on all communications related to substitution requests, clarifications, and interpretations.

§ 3.2.2 During one of the design phases, the Owner will receive a Guaranteed Maximum Price proposal or Control Estimate, as appropriate, from the Construction Manager. The Architect shall assist the Owner in reviewing the Construction Manager's proposal or estimate. The Architect's review is not for the purpose of discovering errors, omissions, or inconsistencies; for the assumption of any responsibility for the Construction Manager's proposed means, methods, sequences, techniques, or procedures; or for the verification of any estimates of cost or estimated cost proposals. In the event that the Architect discovers any inconsistencies or inaccuracies in the information presented, the Architect shall promptly notify the Owner and Construction Manager.

§ 3.2.3 Upon authorization by the Owner, and subject to Section 4.3.1.15, the Architect shall update the Drawings, Specifications, and other documents to incorporate the agreed upon assumptions and clarifications contained in the Guaranteed Maximum Price Amendment or Control Estimate.

§ 3.2.4 If the Guaranteed Maximum Price exceeds the Owner's budget for the Cost of the Work, the Architect and Construction Manager, without additional charge to the Owner, shall endeavor to reduce the price of the Cost of the Work to an amount within the Owner's budget. Failure to reduce the Guaranteed Maximum Price to within the Owner's budget may result in the cancellation of the Construction Manager process.

§ 3.3 Schematic Design Phase Services

§ 3.3.1 The Architect shall review the program and other information furnished by the Owner and Construction Manager, and shall review laws, codes, and regulations applicable to the Architect's services.

§ 3.3.2 The Architect shall prepare a preliminary evaluation of the Owner's program, schedule, budget for the Cost of the Work, Project site, and other Initial Information, each in terms of the other, to ascertain the requirements of the Project. The Architect shall notify the Owner of (1) any inconsistencies discovered in the information, and (2) other information or consulting services that may be reasonably needed for the Project.

§ 3.3.3 The Architect shall present its preliminary evaluation to the Owner and Construction Manager and shall discuss with the Owner and Construction Manager alternative approaches to design and construction of the Project, including the feasibility of incorporating sustainable design approaches, and consideration of the implementation of the Owner's sustainable objective, if any. The Architect shall reach an understanding with the Owner regarding the requirements of the Project.

AIA Document B133™ – 2014. Copyright © 2014 by The American Institute of Architects. All rights reserved. WARNING: This AIA® Document is protected by U.S. Copyright Law and International Treaties. Unauthorized reproduction or distribution of this AIA® Document, or any portion of it, may result in severe civil and criminal penalties, and will be prosecuted to the maximum extent possible under the law. This document was produced by AIA software at 09:28:04 on 11/11/2016 under Order No.1575871642_1 which expires on 02/08/2017, and is not for resale.
User Notes:

(1482978134)

§ 3.3.4 Based on the Project requirements agreed upon with the Owner, the Architect shall prepare and present to the Owner and Construction Manager, for the Owner's approval, a preliminary design illustrating the scale and relationship of the Project components.

§ 3.3.5 Based on the Owner's approval of the preliminary design, the Architect shall prepare Schematic Design Documents for the Owner's approval and the Construction Manager's review. The Schematic Design Documents shall consist of drawings and other documents including a site plan, if appropriate, and preliminary building plans, sections and elevations; and may include some combination of study models, perspective sketches, or digital modeling. Preliminary selections of major building systems and construction materials shall be noted on the drawings or described in writing.

§ 3.3.5.1 The Architect shall consider sustainable design alternatives, such as material choices and building orientation, together with other considerations based on program and aesthetics, implications of sustainable code requirements enacted in the relevant jurisdiction, if any, in developing a design that is consistent with the Owner's program, schedule and budget for the Cost of the Work. The Owner may obtain other sustainable design services under Article 4.

§ 3.3.5.2 The Architect shall consider with the Owner and the Construction Manager the value of alternative materials, building systems and equipment, together with other considerations based on program and aesthetics in developing a design for the Project that is consistent with the Owner's schedule and budget for the Cost of the Work.

§ 3.3.6 The Architect shall submit the Schematic Design Documents to the Owner for the Owner's review and approval. The Architect and the Architect's consultants shall arrange for and participate in a review of the Schematic Documents with the Owner. The Architect shall submit the Schematic Design Documents to the Construction Manager. The Architect and the Architect's consultants shall arrange for and participate in a review of the Schematic Documents with the Construction Manager. The Architect, the Architect's consultants and the Construction Manager shall arrange for and participate in a review of the Schematic Documents prior to the Construction Manager performing a cost estimate of the Work.

§ 3.3.7 Upon receipt of the Construction Manager's review comments and cost estimate at the conclusion of the Schematic Design Phase, the Architect shall take action as required under Section 6.4, identify agreed upon adjustments to the Project's size, quality, or budget, and request the Owner's approval of the Schematic Design Documents. If revisions to the Schematic Design Documents are required to comply with the Owner's budget for the Cost of the Work at the conclusion of the Schematic Design Phase, the Architect shall incorporate the required revisions in the Design Development Phase.

§ 3.3.8 In the further development of the Drawings and Specifications during this and subsequent phases of design, the Architect shall be entitled to rely on the accuracy of the estimates of the Cost of the Work, which are to be provided by the Construction Manager under the Construction Manager's agreement with the Owner.

§ 3.4 Design Development Phase Services

§ 3.4.1 Based on the Owner's approval of the Schematic Design Documents, and on the Owner's authorization of any adjustments in the Project requirements and the budget for the Cost of the Work pursuant to Section 5.4, the Architect shall prepare Design Development Documents for the Owner's approval and Construction Manager's review. The Design Development Documents shall be based upon information provided, and estimates prepared by, the Construction Manager and shall illustrate and describe the development of the approved Schematic Design Documents and shall consist of drawings and other documents including plans, sections, elevations, typical construction details, and diagrammatic layouts of building systems to fix and describe the size and character of the Project as to architectural, structural, mechanical and electrical systems, and such other elements as may be appropriate. The Design Development Documents shall also include outline specifications that identify major materials and systems and establish in general their quality levels.

§ 3.4.2 Prior to the conclusion of the Design Development Phase, the Architect shall submit the Design Development Documents to the Construction Manager for the development of a cost estimate and review. The Architect and Architect's consultants shall meet with the Construction Manager to review the Design Development Documents prior to the Construction Manager performing a cost estimate of the Work.

AIA Document B133™ – 2014. Copyright © 2014 by The American Institute of Architects. All rights reserved. WARNING: This AIA® Document is protected by U.S. Copyright Law and International Treaties. Unauthorized reproduction or distribution of this AIA® Document, or any portion of it, may result in severe civil and criminal penalties, and will be prosecuted to the maximum extent possible under the law. This document was produced by AIA software at 09:28:04 on 11/11/2016 under Order No.1575871642_1 which expires on 02/08/2017, and is not for resale.
User Notes:

(1482978134)

§ 3.4.3 Upon receipt of the Construction Manager's information and estimate at the conclusion of the Design Development Phase, the Architect shall take action as required under Sections 6.5 and 6.6 and request the Owner's approval of the Design Development Documents.

§ 3.5 Construction Documents Phase Services

§ 3.5.1 Based on the Owner's approval of the Design Development Documents, and on the Owner's authorization of any adjustments in the Project requirements and the budget for the Cost of the Work, the Architect shall prepare Construction Documents for the Owner's approval and the Construction Manager's review. The Construction Documents shall illustrate and describe the further development of the approved Design Development Documents and shall consist of Drawings and Specifications setting forth in detail the quality levels of materials and systems and other requirements for the construction of the Work. The Owner and Architect acknowledge that in order to construct the Work the Construction Manager will provide additional information, including Shop Drawings, Product Data, Samples and other similar submittals, which the Architect shall review in accordance with Section 3.6.4.

§ 3.5.2 The Architect shall incorporate into the Construction Documents the design requirements of governmental authorities having jurisdiction over the Project.

§ 3.5.3 During the development of the Construction Documents, if requested by the Owner, the Architect shall assist the Owner and Construction Manager in the development and preparation of (1) the Conditions of the Contract for Construction (General, Supplementary and other Conditions) and (2) a project manual that includes the Conditions of the Contract for Construction and Specifications and may include sample forms.

§ 3.5.3.1 The Construction Manager shall, on behalf of the Owner, prepare applications and submittals for the Owner's use in obtaining all normal design-related construction permits and approvals required by governmental authorities having jurisdiction.

§ 3.5.4 Prior to the conclusion of the Construction Documents Phase, the Architect shall submit the Construction Documents to the Owner and the Construction Manager. The Architect shall meet with the Construction Manager to review the Construction Documents, make adjustments, for coordination and to review costs.

§ 3.5.5 Upon receipt of the Construction Manager's information and estimate at the conclusion of the Construction Documents Phase, the Architect shall take action as required under Section 6.7 and obtain the Owner's approval of the Construction Documents.

§ 3.5.6 The Owner's review and approval of the Construction Documents shall not relieve the Architect for compliance with the requirements of applicable regulations or building codes or for design deficiencies, omissions or errors.

§ 3.6 Construction Phase Services

§ 3.6.1 General

§ 3.6.1.1 The Architect shall provide administration of the Contract between the Owner and the Construction Manager as set forth below and in AIA Document A201™–2007, General Conditions of the Contract for Construction, unless otherwise provided in this Agreement. The Architect shall perform all duties and obligations that are assigned to the Architect in the General Conditions unless such duties and obligations on the part of the Architect are expressly waived in this Agreement. If the Owner and Construction Manager modify AIA Document A201–2007, those modifications shall not affect the Architect's services under this Agreement unless the Owner and the Architect amend this Agreement.

§ 3.6.1.2 Subject to Section 4.3, the Architect's responsibility to provide Construction Phase Services commences upon the Owner's acceptance of the Construction Manager's Guaranteed Maximum Price proposal, the Owner's approval of the Construction Manager's Control Estimate, or the Owner's issuance of a Notice to Proceed to the Construction Manager. Subject to Section 4.3, the Architect's responsibility to provide Construction Phase Services terminates on the date the Architect issues the final Certificate for Payment.

§ 3.6.1.3 The Architect shall be a representative of and advise and consult with the Owner and Construction Manager during the Construction Phase Services. The Architect shall have authority to act on behalf of the Owner

Init.

/

AIA Document B133™ – 2014. Copyright © 2014 by The American Institute of Architects. All rights reserved. WARNING: This AIA® Document is protected by U.S. Copyright Law and International Treaties. Unauthorized reproduction or distribution of this AIA® Document, or any portion of it, may result in severe civil and criminal penalties, and will be prosecuted to the maximum extent possible under the law. This document was produced by AIA software at 09:28:04 on 11/11/2016 under Order No.1575871642_1 which expires on 02/08/2017, and is not for resale.
User Notes:

(1482978134)

only to the extent provided in this Agreement. The Architect shall not have control over, charge of, or responsibility for the construction means, methods, techniques, sequences or procedures, or for safety precautions and programs in connection with the Work, nor shall the Architect be responsible for the Construction Manager's failure to perform the Work in accordance with the requirements of the Contract Documents. The Architect shall be responsible for the Architect's negligent acts or omissions, but shall not have control over or charge of, and shall not be responsible for, acts or omissions of the Construction Manager or of any other persons or entities performing portions of the Work.

§ 3.6.2 Evaluations of the Work

§ 3.6.2.1 The Architect, as a representative of the Owner, shall visit the site at intervals appropriate to the stage of construction, (1) to become generally familiar with and keep the Owner informed about the progress and quality of the portion of the Work completed, (2) to endeavor to guard the Owner against defects and deficiencies in the Work, and (3) to determine, in general, if the Work is being performed in a manner indicating that the Work, when fully completed, will be in accordance with the Contract Documents. However, the Architect shall not be required to make exhaustive or continuous on-site inspections to check the quality or quantity of the Work. On the basis of the site visits, the Architect shall at least once a month submit a written report to the Owner to keep the Owner reasonably informed about the progress and quality of the portion of the Work completed, and report to the Owner (1) known deviations from the Contract Documents and from the most recent construction schedule, and (2) defects and deficiencies observed in the Work.

§ 3.6.2.2 Site visits shall be made by representatives of the Architect and its consultants who are knowledgeable of the Project requirements and competent in each discipline having work in current progress. These representatives shall visit the site at intervals to assure conformance with the design shown in the Contract Documents and to observe, as experienced and qualified design professionals, the progress and quality of the various aspects of the Construction Manager's work.

§ 3.6.2.3 The Architect has the authority to reject Work that does not conform to the Contract Documents unless the Owner decides otherwise. Whenever the Architect considers it necessary or advisable, the Architect shall have the authority to require inspection or testing of the Work in accordance with the provisions of the Contract Documents, whether or not such Work is fabricated, installed or completed. However, neither this authority of the Architect nor a decision made in good faith either to exercise or not to exercise such authority shall give rise to a duty or responsibility of the Architect to the Construction Manager, Subcontractors, material and equipment suppliers, their agents or employees or other persons or entities performing portions of the Work.

§ 3.6.2.4 The Architect shall interpret and decide matters concerning performance under, and requirements of, the Contract Documents on written request of either the Owner or Construction Manager. The Architect's response to such requests shall be made in writing within any time limits agreed upon or otherwise with reasonable promptness.

§ 3.6.2.5 Interpretations and decisions of the Architect shall be consistent with the intent of and reasonably inferable from the Contract Documents and shall be in writing or in the form of drawings. When making such interpretations and decisions, the Architect shall endeavor to secure faithful performance by both Owner and Construction Manager, and shall not show partiality to either. Except in the case of interpretations resulting in omissions, defects or errors in Instruments of Service, or perpetuating commissions, defects or errors in the Instruments of Service, the Architect and its consultants shall not be liable for results of interpretations or decisions rendered in good faith. The Architect's decisions on matters relating to aesthetic effect shall be final if consistent with the intent expressed in the Contract Documents.

§ 3.6.3 Certificates for Payment to Construction Manager

§ 3.6.3.1 The Architect shall review and certify the amounts due the Construction Manager and shall issue certificates in such amounts. The Architect's certification for payment shall constitute a representation to the Owner, based on the Architect's evaluation of the Work as provided in Section 3.6.2 and on the data comprising the Construction Manager's Application for Payment, that, to the best of the Architect's knowledge, information and belief, the Work has progressed to the point indicated and that the quality of the Work is in accordance with the Contract Documents. The foregoing representations are subject (1) to results of subsequent tests and inspections, (2) to correction of minor deviations from the Contract Documents prior to completion, and (3) to specific qualifications expressed by the Architect to the Owner in writing prior to the issuance of a certificate of payment.

AIA Document B133™ – 2014. Copyright © 2014 by The American Institute of Architects. All rights reserved. WARNING: This AIA® Document is protected by U.S. Copyright Law and International Treaties. Unauthorized reproduction or distribution of this AIA® Document, or any portion of it, may result in severe civil and criminal penalties, and will be prosecuted to the maximum extent possible under the law. This document was produced by AIA software at 09:28:04 on 11/11/2016 under Order No.1575871642_1 which expires on 02/08/2017, and is not for resale.
User Notes:

(1482978134)

§ 3.6.3.2 The issuance of a Certificate for Payment shall not be a representation that the Architect has (1) made exhaustive or continuous on-site inspections to check the quality or quantity of the Work, (2) reviewed construction means, methods, techniques, sequences or procedures, (3) reviewed copies of requisitions received from Subcontractors and material suppliers and other data requested by the Owner to substantiate the Construction Manager's right to payment, or (4) ascertained how or for what purpose the Construction Manager has used money previously paid on account of the Contract Sum.

§ 3.6.3.3 The Architect shall maintain a record of the Applications and Certificates for Payment.

§ 3.6.4 Submittals

§ 3.6.4.1 The Architect shall review the Construction Manager's submittal schedule and shall not unreasonably delay or withhold approval. The Architect's action in reviewing submittals shall be taken in accordance with the approved submittal schedule or, in the absence of an approved submittal schedule, with reasonable promptness.

§ 3.6.4.2 In accordance with the Architect-approved Construction Manager's submittal schedule, the Architect shall review and approve or take other appropriate action upon the Construction Manager's submittals such as Shop Drawings, Product Data and Samples, but only for the limited purpose of checking for conformance with information given and the design concept expressed in the Contract Documents. Review of such submittals is not for the purpose of determining the accuracy and completeness of other information such as dimensions, quantities, and installation or performance of equipment or systems, which are the Construction Manager's responsibility. The Architect's review shall not constitute approval of safety precautions or, unless otherwise specifically stated by the Architect, of any construction means, methods, techniques, sequences or procedures. The Architect's approval of a specific item shall not indicate approval of an assembly of which the item is a component.

§ 3.6.4.3 If the Contract Documents specifically require the Construction Manager to provide professional design services or certifications by a design professional related to systems, materials or equipment, the Architect shall specify the appropriate performance and design criteria that such services must satisfy. The Architect shall review shop drawings and other submittals related to the Work designed or certified by the design professional retained by the Construction Manager that bear such professional's seal and signature when submitted to the Architect. The Architect shall be entitled to rely upon the adequacy, accuracy and completeness of the services, certifications and approvals performed or provided by such design professionals.

§ 3.6.4.4 Subject to the provisions of Section 4.3, the Architect shall review and respond to requests for information about the Contract Documents. The Architect shall set forth in the Contract Documents the requirements for requests for information. Requests for information shall include, at a minimum, a detailed written statement that indicates the specific Drawings or Specifications in need of clarification and the nature of the clarification requested. The Architect's response to such requests shall be made in writing with reasonable promptness. If appropriate, the Architect shall prepare and issue supplemental Drawings and Specifications in response to requests for information.

§ 3.6.4.5 The Architect shall maintain a detailed, chronological record of submittals and copies of submittals supplied by the Construction Manager in accordance with the requirements of the Contract Documents.

§ 3.6.5 Changes in the Work

§ 3.6.5.1 The Architect may authorize minor changes in the Work that are consistent with the intent of the Contract Documents and do not involve an adjustment in the Contract Sum or an extension of the Contract Time. Subject to the provisions of Section 4.3, the Architect shall prepare Change Orders and Construction Change Directives, with supporting technical and cost documentation and data, for the Owner's approval and execution in accordance with the Contract Documents. Prior to preparing any Modification, the Architect shall request from the Construction Manager any substantiating data required by Article 7 of the General Conditions of the Contract for Construction, including cost or pricing data, as applicable, and assist the Owner in a thorough review of the information provided.

§ 3.6.5.2 The Architect shall maintain detailed, chronological records relative to changes in the Work.

§ 3.6.6 Project Completion

§ 3.6.6.1 The Architect and the Architect's consultants shall conduct inspections to determine the date or dates of Substantial Completion and the date of final completion; issue Certificates of Substantial Completion; receive from the Construction Manager and forward to the Owner, for the Owner's review and records, written warranties and

AIA Document B133™ – 2014. Copyright © 2014 by The American Institute of Architects. All rights reserved. WARNING: This AIA® Document is protected by U.S. Copyright Law and International Treaties. Unauthorized reproduction or distribution of this AIA® Document, or any portion of it, may result in severe civil and criminal penalties, and will be prosecuted to the maximum extent possible under the law. This document was produced by AIA software at 09:28:04 on 11/11/2016 under Order No.1575871642_1 which expires on 02/08/2017, and is not for resale.
User Notes:

(1482978134)

related documents required by the Contract Documents and assembled by the Construction Manager; and issue a final Certificate for Payment based upon a final inspection indicating the Work complies with the requirements of the Contract Documents.

§ 3.6.6.1.1 The Architect and the Architect's consultants and Engineers shall provide one Substantial Completion inspection and one Final Completion Inspection as part of Basic Services. Where projects have been designed for phased completion, the Architect and the Architect's consultants and Engineers shall provide one Substantial Completion inspection and one Final Completion Inspection for each phase of the project. If additional inspections are required, payment to the Architect shall be adjusted in accordance with Section 4.3.

§ 3.6.6.2 The Architect's inspections shall be conducted with the Owner to check conformance of the Work with the requirements of the Contract Documents and to verify the accuracy and completeness of the list submitted by the Construction Manager of Work to be completed or corrected.

§ 3.6.6.3 When the Work is found to be substantially complete, the Architect shall inform the Owner about the balance of the Contract Sum remaining to be paid the Construction Manager, including the amount to be retained from the Contract Sum, if any, for final completion or correction of the Work.

§ 3.6.6.4 The Architect shall forward to the Owner the following information received from the Construction Manager: (1) consent of surety or sureties, if any, to reduction in or partial release of retainage or the making of final payment; (2) affidavits, receipts, releases and waivers of liens or bonds indemnifying the Owner against liens; and (3) any other documentation required of the Construction Manager under the Contract Documents.

§ 3.6.6.5 No later than the 10th (tenth) month after the date of Substantial Completion, the Architect shall, without additional compensation, conduct a meeting with the Owner to inspect the Project and review the facility operations and performance. The Architect shall prepare a report indicating outstanding work or deficiencies in the Work to be corrected by the Construction Manager. The Architect shall provide the report to the Owner and, at the Owner's direction, to the Construction Manager. Upon the Owner's request and as Additional Service, the Architect shall assist the Owner in taking necessary action to see that the deficiencies are corrected.

§ 3.6.6.6 The Architect shall prepare, from Construction Manager-supplied information, and provide to the Owner a set of reproducible Record Plans showing all significant changes in the work made during construction. Plans shall be stamped "Record Plans". This set of reproducible documents shall be in addition to computer media plans.

§ 3.7 Coordination of Services

Architect shall be fully responsible for coordinating all Architect's Basic and Additional Services required under this Agreement regardless of whether performed by its own employees or by consultants hired by Architect to perform a portion of its services ("Subconsultants"). The purpose of such coordination is to ensure that the services required are performed in a reasonably efficient, timely and economical manner. Architect shall be responsible to Owner for the services furnished to the Architect by Subconsultants to the same extent as if Architect had furnished the service itself. Architect also agrees to coordinate, and resolve any inconsistencies in its work of its Subconsultants. All of the Architect's contracts with Subconsultants shall be in writing, signed by both parties, and shall include the provision: "The Owner is intended to be a third party beneficiary of the agreement."

§ 3.7.1 Compliance with Laws

Architect shall provide a design which when constructed in accordance with the Contract Documents will comply with all applicable federal, state and local laws, statutes, ordinances, rules, regulations, orders or other legal requirements existing on the date of this Agreement and which may be enacted prior to Owner's approval of completed Construction Documents.

ARTICLE 4 ADDITIONAL SERVICES

§ 4.1 Unless otherwise provided in this Agreement, Additional Services listed below and not identified as a Basic Service are not included in Basic Services but may be required for the Project. The Architect shall provide the listed Additional Services only if specifically designated in the table below as the Architect's responsibility, and the Owner shall compensate the Architect as provided in Section 11.2.

AIA Document B133™ – 2014. Copyright © 2014 by The American Institute of Architects. All rights reserved. WARNING: This AIA® Document is protected by U.S. Copyright Law and International Treaties. Unauthorized reproduction or distribution of this AIA® Document, or any portion of it, may result in severe civil and criminal penalties, and will be prosecuted to the maximum extent possible under the law. This document was produced by AIA software at 09:28:04 on 11/11/2016 under Order No.1575871642_1 which expires on 02/08/2017, and is not for resale.
User Notes:

(1482978134)

(Designate the Additional Services the Architect shall provide in the second column of the table below. In the third column indicate whether the service description is located in Section 4.2 or in an attached exhibit. If in an exhibit, identify the exhibit.)

Services		**Responsibility** *(Architect, Owner or Not Provided)*	**Location of Service Description** *(Section 4.2 below or in an exhibit attached to this document and identified below)*
§ 4.1.1	Assistance Owner with selection of the Construction Manager	Architect/Owner	Completed
§ 4.1.2	Programming	Architect/Owner	Completed
§ 4.1.3	Multiple preliminary designs	NP	
§ 4.1.4	Measured drawings	NP	
§ 4.1.5	Existing facilities survey	Architect	Included in Basic Services
§ 4.1.6	Site Evaluation and Planning (B203™–2007)	NP	
§ 4.1.7	Building Information Modeling (E203™–2013)	NP	
§ 4.1.8	Civil engineering	Owner	
§ 4.1.9	Landscape design	NP	
§ 4.1.10	Architectural Interior Design (B252™–2007)	NP	
§ 4.1.11	Value Analysis (B204™–2007)	NP	
§ 4.1.12	Detailed cost estimating	NP	
§ 4.1.13	On-site project representation (B207™–2008)	Owner	
§ 4.1.14	Conformed construction documents	NP	
§ 4.1.15	As-Designed Record drawings	NP	
§ 4.1.16	As-Constructed Record drawings	Architect	Included in Basic Services
§ 4.1.17	Post occupancy evaluation	Architect/Owner	
§ 4.1.18	Facility Support Services (B210™–2007)	NP	
§ 4.1.19	Tenant-related services	NP	
§ 4.1.20	Coordination of Owner's consultants	Architect	
§ 4.1.21	Telecommunications/data design	Owner	
§ 4.1.22	Security Evaluation and Planning (B206™–2007)	Owner	
§ 4.1.23	Commissioning (B211™–2007)	Owner	
§ 4.1.24	Extensive sustainable design services	NP	
§ 4.1.25	LEED® Certification (B214™–2012)	NP	
§ 4.1.26	Historic Preservation (B205™–2007)	NP	
§ 4.1.27	Furniture, Furnishings, and Equipment Design	Architect/Owner	
§ 4.1.28	Hazardous Materials Survey	Owner	Completed

§ 4.2 Insert a description of each Additional Service designated in Section 4.1 as the Architect's responsibility, if not further described in an exhibit attached to this document.

§ 4.3 Additional Services may be provided after execution of this Agreement, without invalidating the Agreement. Except for services required due to the fault of the Architect, any Additional Services provided in accordance with this Section 4.3 shall entitle the Architect to compensation pursuant to Section 11.3 and an appropriate adjustment in the Architect's schedule.

AIA Document B133™ – 2014. Copyright © 2014 by The American Institute of Architects. All rights reserved. WARNING: This AIA® Document is protected by U.S. Copyright Law and International Treaties. Unauthorized reproduction or distribution of this AIA® Document, or any portion of it, may result in severe civil and criminal penalties, and will be prosecuted to the maximum extent possible under the law. This document was produced by AIA software at 09:28:04 on 11/11/2016 under Order No.1575871642_1 which expires on 02/08/2017, and is not for resale.
User Notes:

(1482978134)

§ 4.3.1 Upon recognizing the need to perform the following Additional Services, the Architect shall notify the Owner with reasonable promptness and explain the facts and circumstances giving rise to the need. The Architect shall not proceed to provide the following services until the Architect receives the Owner's written authorization:

- **.1** Services necessitated by a change in the Initial Information, previous instructions or recommendations given by the Construction Manager or the Owner, approvals given by the Owner, or a material change in the Project including, but not limited to, size, quality, complexity, the Owner's schedule or budget for Cost of the Work, or bid packages in addition to those listed in Section 1.1.6;
- **.2** Making revisions in Drawings, Specifications, or other documents (as required pursuant to Section 6.7), when such revisions are required because the Construction Manager's estimate of the Cost of the Work, Guaranteed Maximum Price proposal, or Control Estimate exceeds the Owner's budget, except where such excess is due to changes initiated by the Architect in scope, capacities of basic systems, or the kinds and quality of materials, finishes, or equipment;
- **.3** Services necessitated by the Owner's request for extensive sustainable design alternatives, such as unique system designs, in-depth material research, energy modeling, or LEED® certification;
- **.4** Changing or editing previously prepared Instruments of Service necessitated by the enactment or revision of codes, laws or regulations, or revisions or changes to official interpretations;
- **.5** Services necessitated by decisions of the Owner or Construction Manager not rendered in a timely manner or any other failure of performance on the part of the Owner or the Owner's consultants or contractors;
- **.6** *Reserved*
- **.7** Preparation of design and documentation for alternate bid or proposal requests proposed by the Owner or Construction Manager;
- **.8** Preparation for, and attendance at, a public presentation, meeting or hearing;
- **.9** Preparation for, and attendance at a dispute resolution proceeding or legal proceeding, except where the Architect is party thereto;
- **.10** *Reserved*
- **.11** Consultation concerning replacement of Work resulting from fire or other cause during construction;
- **.12** *Reserved*
- **.13** Services necessitated by replacement of the Construction Manager or conversion of the Construction Manager as constructor project delivery method to an alternative project delivery method;
- **.14** Services necessitated by the Owner's delay in engaging the Construction Manager; and
- **.15** Making revisions in Drawings, Specifications, and other documents resulting from substitutions included in the agreed to assumptions and clarifications contained in the Guaranteed Maximum Price Amendment or Control Estimate.

§ 4.3.2 To avoid delay in the Construction Phase, the Architect shall provide the following Additional Services, notify the Owner with reasonable promptness, and explain the facts and circumstances giving rise to the need. If the Owner subsequently determines that all or parts of those services are not required, the Owner shall give prompt written notice to the Architect, and the Owner shall have no further obligation to compensate the Architect for those services:

- **.1** Reviewing a Construction Manager's submittal out of sequence from the submittal schedule agreed to by the Architect;
- **.2** Responding to the Construction Manager's requests for information that are not prepared in accordance with the Contract Documents or where such information is available to the Construction Manager from a careful study and comparison of the Contract Documents, field conditions, other Owner-provided information, Construction Manager-prepared coordination drawings, or prior Project correspondence or documentation;
- **.3** Preparing Change Orders, and Construction Change Directives that require evaluation of the Construction Manager's proposals and supporting data, or the preparation or revision of Instruments of Service, provided such Change Orders and Change Directives are not the result of omissions, defects or errors in the Instruments of Service;
- **.4** *Reserved*
- **.5** Evaluating substitutions proposed by the Owner or Construction Manager and making subsequent revisions to Instruments of Service resulting therefrom; or
- **.6** To the extent the Architect's Basic Services are affected, providing Construction Phase Services. Other than those required in Section 3.6.6.5, 60 days after (1) the date of Substantial Completion of

Init.

AIA Document B133™ – 2014. Copyright © 2014 by The American Institute of Architects. All rights reserved. WARNING: This AIA® Document is protected by U.S. Copyright Law and International Treaties. Unauthorized reproduction or distribution of this AIA® Document, or any portion of it, may result in severe civil and criminal penalties, and will be prosecuted to the maximum extent possible under the law. This document was produced by AIA software at 09:28:04 on 11/11/2016 under Order No.1575871642_1 which expires on 02/08/2017, and is not for resale.
User Notes:

(1482978134)

the Work or (2) the anticipated date of Substantial Completion, identified in Initial Information, whichever is earlier, provided the delay in Substantial Completion of the Work is for causes beyond the control of the Architect and the Architect's consultants.

§ 4.3.3
(Paragraphs deleted)
Reserved

§ 4.3.4 *Reserved*

ARTICLE 5 OWNER'S RESPONSIBILITIES

§ 5.1 Unless otherwise provided for under this Agreement, the Owner shall provide information in a timely manner regarding requirements for and limitations on the Project, including a written program which shall set forth the Owner's objectives, schedule, constraints and criteria, including space requirements and relationships, flexibility, expandability, special equipment, systems and site requirements.

§ 5.2 The Owner shall retain a Construction Manager to provide services, duties, and responsibilities as described in the agreement selected in Section 1.1.5.

§ 5.3 The Owner shall furnish the services of a Construction Manager that shall be responsible for creating the overall Project schedule. The Owner shall adjust the Project schedule, if necessary, as the Project proceeds.

§ 5.4 The Owner shall establish and periodically update the Owner's budget for the Project, including (1) the budget for the Cost of the Work as defined in Section 6.1; (2) the Owner's other costs; and, (3) reasonable contingencies related to all of these costs. The Owner shall furnish the services of a Construction Manager that shall be responsible for preparing all estimates of the Cost of the Work. If the Owner significantly increases or decreases the Owner's budget for the Cost of the Work, the Owner shall notify the Architect. The Owner and the Architect shall thereafter agree to a corresponding change in the budget for the Cost of the Work or in the Project's scope and quality.

§ 5.4.1 The Owner acknowledges that accelerated, phased or fast-track scheduling provides a benefit, but also carries with it associated risks. Such risks include the Owner incurring costs for the Architect to coordinate and redesign portions of the Project affected by procuring or installing elements of the Project prior to the completion of all relevant Construction Documents, and costs for the Construction Manager to remove and replace previously installed Work. If the Owner selects accelerated, phased or fast-track scheduling, the Owner agrees to include in the budget for the Project sufficient contingencies to cover such costs.

§ 5.5 The Owner shall identify a representative authorized to act on the Owner's behalf with respect to the Project. The Owner shall render decisions and approve the Architect's submittals in a timely manner in order to avoid unreasonable delay in the orderly and sequential progress of the Architect's services.

§ 5.6 The Owner shall furnish surveys to describe physical characteristics, legal limitations and utility locations for the site of the Project, and a written legal description of the site. The surveys and legal information shall include, as applicable, grades and lines of streets, alleys, pavements and adjoining property and structures; designated wetlands; adjacent drainage; rights-of-way, restrictions, easements, encroachments, zoning, deed restrictions, boundaries and contours of the site; locations, dimensions and necessary data with respect to existing buildings, other improvements and trees; and information concerning available utility services and lines, both public and private, above and below grade, including inverts and depths. All the information on the survey shall be referenced to a Project benchmark.

§ 5.7 The Owner shall furnish services of geotechnical engineers, which may include but are not limited to test borings, test pits, determinations of soil bearing values, percolation tests, evaluations of hazardous materials, seismic evaluation, ground corrosion tests and resistivity tests, including necessary operations for anticipating subsoil conditions, with written reports and appropriate recommendations.

§ 5.8 The Owner shall coordinate the services of its own consultants with those services provided by the Architect. Upon the Architect's request, the Owner shall furnish copies of the scope of services in the contracts between the Owner and the Owner's consultants. The Owner shall furnish the services of consultants other than those designated in this Agreement, or authorize the Architect to furnish them as an Additional Service, when the Architect requests

Init.
AIA Document B133™ – 2014. Copyright © 2014 by The American Institute of Architects. All rights reserved. WARNING: This AIA® Document is protected by U.S. Copyright Law and International Treaties. Unauthorized reproduction or distribution of this AIA® Document, or any portion of it, may result in severe civil and criminal penalties, and will be prosecuted to the maximum extent possible under the law. This document was produced by AIA software at 09:28:04 on 11/11/2016 under Order No.1575871642_1 which expires on 02/08/2017, and is not for resale.
User Notes:

(1482978134)

such services and demonstrates that they are reasonably required by the scope of the Project. The Owner shall require that its consultants maintain professional liability insurance and other liability insurance as appropriate to the services provided.

§ 5.9 The Owner shall furnish tests, inspections and reports required by law or the Contract Documents, such as structural, mechanical, and chemical tests, tests for air and water pollution, and tests for hazardous materials.

§ 5.10 The Owner shall furnish all legal, insurance and accounting services, including auditing services, that may be reasonably necessary at any time for the Project to meet the Owner's needs and interests.

§ 5.11 The Owner, with reasonable promptness, shall provide written notice to the Architect and Construction Manager if the Owner becomes aware of any fault or defect in the Project, including errors, omissions or inconsistencies in the Architect's Instruments of Service.

§ 5.12 The Owner will endeavor to communicate with the Construction Manager and Architect's consultants through the Architect about matters arising out of or relating to the Contract Documents. The Owner shall notify the Architect of any direct communications that may affect the Architect's services within a reasonable time.

§ 5.13 Before executing the Contract for Construction, the Owner shall coordinate the Architect's duties and responsibilities set forth in the Contract for Construction with the Architect's services set forth in this Agreement. The Owner shall provide the Architect a copy of the executed agreement between the Owner and Construction Manager, including the General Conditions of the Contract for Construction.

§ 5.14 The Owner shall provide the Architect access to the Project site prior to commencement of the Work and shall obligate the Construction Manager to provide the Architect access to the Work wherever it is in preparation or progress.

§ 5.15 Notwithstanding anything to the contrary contained in this Agreement, the Owner's review and approval of any and all documents or other matters required herein shall not be construed to be for the purpose of determining the Architect has met its professional duty of care in the preparation of the Instruments of Service.

§ 5.16 Any reference in the Contract Documents to the Owner taking action or rendering a decision within a "reasonable time" or with "reasonable promptness" is understood to mean no more than fourteen (14) days, unless otherwise specified in the Contract Documents or otherwise agreed to by the parties.

ARTICLE 6 COST OF THE WORK

§ 6.1 For purposes of this Agreement, the Cost of the Work shall be the total cost to the Owner to construct all elements of the Project designed or specified by the Architect and shall include the Construction Managers' general conditions costs, overhead, and profit. The Cost of the Work does not include the compensation of the Architect, the compensation of the Construction Manager for Preconstruction Phase services, the costs of the land, rights-of-way, financing, contingencies for changes in the Work or other costs that are the responsibility of the Owner.

§ 6.2 The Owner's budget for the Cost of the Work is provided in the Initial Information, and may be adjusted throughout the Project as required under Sections 5.4 and 6.4. Evaluations of the Owner's budget for the Cost of the Work represent the Architect's judgment as a design professional.

§ 6.3 In preparing estimates for the Cost of Work, the Construction Manager at Risk shall be permitted to include contingencies for subcontract bidding and price escalation; to determine what materials, equipment, component systems and types of construction are to be included in the Contract Documents; and, in consultation with, and subject to approval by, the Owner, to make reasonable adjustment in the program and scope of the Project as may be necessary to adjust the estimated Cost of the Work to meet the Owner's budget for the Cost of the Work. The Construction Manager's estimate of the Cost of the Work shall be based on current area, volume or similar conceptual estimating techniques. If the Owner requests detailed cost estimating services being the Construction Manager cost services, such services shall be provided as an Additional Service.

AIA Document B133™ – 2014. Copyright © 2014 by The American Institute of Architects. All rights reserved. WARNING: This AIA® Document is protected by U.S. Copyright Law and International Treaties. Unauthorized reproduction or distribution of this AIA® Document, or any portion of it, may result in severe civil and criminal penalties, and will be prosecuted to the maximum extent possible under the law. This document was produced by AIA software at 09:28:04 on 11/11/2016 under Order No.1575871642_1 which expires on 02/08/2017, and is not for resale.
User Notes:

(1482978134)

§ 6.3.1 If the Architect is providing detailed cost estimating services as an Additional Service, and a discrepancy exists between the Construction Manager's cost estimates and the Architect's cost estimates, the Architect shall work cooperatively with the Construction Manager to conform the cost estimates to one another.

§ 6.3.2 Subject to Section 4.3, if the Owner engages a Cost Consultant and a discrepancy exists between the Construction Manager's estimate and the Cost Consultant's estimate, the Architect shall assist the Cost Consultant and Construction Manager as necessary to conform the estimates to one another.

§ 6.4 If, prior to the conclusion of the Design Development Phase, the Construction Manager's estimate of the Cost of the Work exceeds the Owner's budget and previously approved estimates, the Construction Manager shall notify and make recommendations to the Owner and Architect. The Architect, in consultation with the Construction Manager, shall prepare revisions to Drawings, Specifications or other documents required due to the inaccuracies or incompleteness in the cost estimate. The Architect is to review the Construction Manager estimates, make appropriate recommendations to the Owner to adjust the Project's size or budget, and the Owner shall for the Architect's guidance in completion of its services, receive guidance from the Construction Manager as to the materials selection, and coordination of design. The Architect shall report to the Owner any material inaccuracies and inconsistencies noted during the review to the Construction Manager and the Owner.

§ 6.5 If at any time the Construction Manager's estimate of the Cost of the Work exceeds the Owner's budget for the Cost of the Work,
(Paragraphs deleted)
the Architect shall, in consultation with the Construction Manager, make appropriate recommendations to the Owner to adjust the Project's size or quality for the Cost of the Work and the Owner shall cooperate with the Architect in making such adjustments. However, the Architect shall not be required to perform such services at no cost to the Owner if the unfavorable estimate is the result of conditions beyond the Architect's reasonable control.

§ 6.6 *Reserved*

§ 6.7 *Reserved*

ARTICLE 7 COPYRIGHTS AND LICENSES

§ 7.1 The Architect represents that in transmitting Instruments of Service, or any other information, the Architect is the copyright owner of such information or has permission from the copyright owner to transmit such information for its use on the Project. If the Owner and Architect intend to transmit Instruments of Service or any other information or documentation in digital form, they shall endeavor to establish necessary protocols governing such transmissions.

§ 7.2 The Architect and the Architect's consultants shall be deemed the authors and owners of their respective Instruments of Service, including the Drawings and Specifications, and shall retain all common law, statutory and other reserved rights, including copyrights. Submission or distribution of Instruments of Service to meet official regulatory requirements or for similar purposes in connection with the Project is not to be construed as publication in derogation of the reserved rights of the Architect and the Architect's consultants.

§ 7.3 The Owner acknowledges the Architect's and Engineering subconsultant's construction documents, including electronic files, as instruments of professional service. Nevertheless, the final construction documents prepared under this Agreement shall become the property of the Owner upon completion of the services and payment in full of all undisputed monies due to the Architect. The Owner shall not reuse for another project. The Owner agrees, to the fullest extent permitted by law, to indemnify and hold harmless the Architect, its officers, directors, employees and subconsultants (collectively, the Architect) against any damages, liabilities or costs, including reasonable attorneys' fees and defense costs, arising from or allegedly arising from or in any way connected with the unauthorized reuse or modification of the construction documents by the Owner or any person or entity that acquires or obtains the construction documents from or through the Owner without the written authorization of the Architect.

§ 7.3.1 In the event the Owner uses the Instruments of Service without retaining the authors of the Instruments of Service, the Owner releases the Architect and Architect's consultant(s) from all claims and causes of action arising from such uses. The Owner, to the extent permitted by law, further agrees to waive any claims against, and indemnify and hold harmless, the Architect and its consultants from all costs and expenses, including the cost of

AIA Document B133™ – 2014. Copyright © 2014 by The American Institute of Architects. All rights reserved. WARNING: This AIA® Document is protected by U.S. Copyright Law and International Treaties. Unauthorized reproduction or distribution of this AIA® Document, or any portion of it, may result in severe civil and criminal penalties, and will be prosecuted to the maximum extent possible under the law. This document was produced by AIA software at 09:28:04 on 11/11/2016 under Order No.1575871642_1 which expires on 02/08/2017, and is not for resale.
User Notes:

(1482978134)

defense, related to claims and causes of action asserted by any third person or entity to the extent such costs and expenses arise from the Owner's use of the Instruments of Service under this Section 7.3.1.

§ 7.4 *Reserved*

§ 7.5 The Architect shall not use or allow to be used the Drawings, Specifications or reports or unique design aspects of this Project for any other project, without the prior written approval of the Owner. Architect may re-use standard specification texts and details.

§ 7.6 Upon the filing by the Architect of a petition in bankruptcy or upon other proceeding or action by or against the Architect under the relevant law on bankruptcy, this Agreement shall be governed by Section 365(n) of the U.S. Bankruptcy Code, if applicable. If any person seeks to reject this Agreement pursuant to bankruptcy law, the Owner shall have the option of using the Instruments of Service for either the original term of this Agreement or a period of five (5) years after rejection is requested.

ARTICLE 8 CLAIMS AND DISPUTES

§ 8.1 General

§ 8.1.1 The Architect shall indemnify and hold the Owner and the Owner's officers and employees harmless from and against damages, losses and judgments arising from claims by third parties, including reasonable attorneys' fees and expenses recoverable under applicable law, but only to the extent they are caused by the negligent acts or omissions of the Architect, its employees and its consultants in the performance of professional services under this Agreement.

(Paragraphs deleted)

§ 8.2 Mediation

§ 8.2.1 The Owner and Architect may endeavor to resolve claims, disputes and other matters in question between them by mediation. A request for mediation shall be made in writing, delivered to the other party to the Agreement, and filed with the person or entity administering the mediation. The request may be made concurrently with the filing of a complaint.

§ 8.2.2 The parties shall share the mediator's fee and any filing fees equally. The mediation shall be held in the place where the Project is located, unless another location is mutually agreed upon. Agreements reached in mediation shall be enforceable as settlement agreements in any court having jurisdiction thereof.

§ 8.2.3 If the parties do not resolve a dispute through mediation pursuant to this Section 8.2, the method of binding dispute resolution shall be the following:
(Check the appropriate box. If the Owner and Architect do not select a method of binding dispute resolution below, or do not subsequently agree in writing to a binding dispute resolution method other than litigation, the dispute will be resolved in a court of competent jurisdiction.)

[ ]Arbitration

[X] Litigation in a court of competent jurisdiction

[ ]Other: *(Specify)*

§ 8.2.4
(Paragraphs deleted)
In the event of any Controversy between Owner and Architect under this Agreement, including but not limited to, whether or not any services Owner expects Architect to perform are within the scope of Basic Services or any dispute as to whether the Architect is entitled to additional compensation for any Work required, Architect shall continue to proceed diligently with the performance of its services under this Agreement pending resolution of the dispute, and Owner agrees to pay Architect in accordance with this Agreement for all services rendered by Architect which are not the subject of the Controversy.

(Paragraphs deleted)

AIA Document B133™ – 2014. Copyright © 2014 by The American Institute of Architects. All rights reserved. WARNING: This AIA® Document is protected by U.S. Copyright Law and International Treaties. Unauthorized reproduction or distribution of this AIA® Document, or any portion of it, may result in severe civil and criminal penalties, and will be prosecuted to the maximum extent possible under the law. This document was produced by AIA software at 09:28:04 on 11/11/2016 under Order No.1575871642_1 which expires on 02/08/2017, and is not for resale.
User Notes:

(1482978134)

ARTICLE 9 TERMINATION OR SUSPENSION

§ 9.1 If the Owner fails to make payments to the Architect in accordance with this Agreement, such failure shall be considered substantial nonperformance and cause for termination or, at the Architect's option, subject to Section 8.2.5, cause for suspension of performance of services under this Agreement. If the Architect elects to suspend services, the Architect shall give written notice to the Owner. Unless Architect receives payment in full for undisputed amounts within twenty-one (21) days of the Owner's receipt of the Architect's notice, the suspension shall take effect without further notice. In the event of a suspension of services, the Architect shall have no liability to the Owner for delay or damage caused the Owner because of such suspension of services. Before resuming services, the Architect shall be paid all undisputed sums due prior to suspension and any direct expenses incurred in the interruption and resumption of the Architect's services. The Architect's fees for the remaining services and the time schedules shall be equitably adjusted.

§ 9.2 If the Owner suspends the Project, the Architect shall be compensated for services performed prior to notice of such suspension. When the Project is resumed, the Architect shall be compensated for expenses incurred in the interruption and resumption of the Architect's services. The Architect's fees for the remaining services and the time schedules shall be equitably adjusted if the suspension exceeds ninety (90) days.

§ 9.3 If the Owner suspends the Project for more than 90 cumulative days for reasons other than the fault of the Architect, the Architect may terminate this Agreement by giving not less than fourteen (14) days' written notice.

§ 9.4 Either party may terminate this Agreement upon not less than twenty-one (21) days' written notice should the other party fail substantially to perform in accordance with the terms of this Agreement through no fault of the party initiating the termination.

§ 9.5 The Owner may terminate this Agreement upon not less than seven days' written notice to the Architect for the Owner's convenience and without cause.

§ 9.6 In the event of termination not the fault of the Architect, the Architect shall be compensated for services performed prior to termination, together with Reimbursable Expenses then due and all Termination Expenses as defined in Section 9.7.

§ 9.7 Termination Expenses are in addition to compensation for the Architect's services and include expenses directly attributable to termination for which the Architect is not otherwise compensated, plus an amount for reasonable profit on the value of the services not performed at the Owner's request as a result of the termination.

§ 9.8 In the event of suspension or termination for convenience, upon request of Owner and payment of all fees pursuant to this Article, Architect shall promptly provide Owner with reproducible drawings and computer tapes or disks of all documents completed or in progress on the date of termination. The Owner's rights to use the Architect's Instruments of Service in the event of a termination of this Agreement are set forth in Article 7.

ARTICLE 10 MISCELLANEOUS PROVISIONS

§ 10.1 This Agreement, any dispute, claim or controversy relating to this Agreement, and all the rights and obligations of the parties shall, in all respects, be interpreted , construed, enforced and governed by and under the law of the State of New Hampshire.

§ 10.2 Terms in this Agreement shall have the same meaning as those in AIA Document A201–2007, General Conditions of the Contract for Construction, except as modified in this Agreement. The term "Contractor" as used in A201–2007 shall mean the Construction Manager.

§ 10.3 The Owner and Architect, respectively, bind themselves, their agents, successors, assigns and legal representatives to this Agreement. Neither the Owner nor the Architect shall assign this Agreement without the written consent of the other, except that the Owner may assign this Agreement to a lender providing financing for the Project if the lender agrees to assume the Owner's rights and obligations under this Agreement.

§ 10.4 If the Owner requests the Architect to execute certificates, the proposed language of such certificates shall be submitted to the Architect for review at least 14 days prior to the requested dates of execution. If the Owner requests the Architect to execute consents reasonably required to facilitate assignment to a lender, the Architect shall execute

AIA Document B133™ – 2014. Copyright © 2014 by The American Institute of Architects. All rights reserved. WARNING: This AIA® Document is protected by U.S. Copyright Law and International Treaties. Unauthorized reproduction or distribution of this AIA® Document, or any portion of it, may result in severe civil and criminal penalties, and will be prosecuted to the maximum extent possible under the law. This document was produced by AIA software at 09:28:04 on 11/11/2016 under Order No.1575871642_1 which expires on 02/08/2017, and is not for resale.
User Notes:

(1482978134)

all such consents that are consistent with this Agreement, provided the proposed consent is submitted to the Architect for review at least 14 days prior to execution. The Architect shall not be required to execute certificates or consents that would require knowledge, services or responsibilities beyond the scope of this Agreement.

§ 10.5 Nothing contained in this Agreement shall create a contractual relationship with or a cause of action in favor of a third party against either the Owner or Architect.

§ 10.6 Unless otherwise required in this Agreement, the Architect shall have no responsibility for the discovery, presence, handling, removal or disposal of, or exposure of persons to, hazardous materials or toxic substances in any form at the Project site.

§ 10.7 Subject to the Owner's written prior approval, which shall not be unreasonably withheld, the Architect shall have the right to include photographic or artistic representations of the design of the Project among the Architect's promotional and professional materials. The Architect shall be given reasonable access to the completed Project to make such representations. However, the Architect's materials shall not include the Owner's confidential or proprietary information if the Owner has previously advised the Architect in writing of the specific information considered by the Owner to be confidential or proprietary. The Owner shall provide professional credit for the Architect in the Owner's promotional materials for the Project.

§ 10.8 If the Architect or Owner receives information specifically designated by the other party as "confidential" or "business proprietary," the receiving party shall, to the extent permitted by law, keep such information strictly confidential and shall not disclose it to any other person except to (1) its employees, (2) those who need to know the content of such information in order to perform services or construction solely and exclusively for the Project, or (3) its consultants and contractors whose contracts include similar restrictions on the use of confidential information.

§ 10.9 Upon request, the Architect shall provide the Owner with copies of all documents, in their original form, in the Architect's possession that regard the Project.

§ 10.10 Owner does not waive any prior or subsequent breach of the terms of this Agreement by making payments on the Agreement, by failing to terminate the Agreement for lack of performance, or by failing to strictly or promptly insist upon any term of the Agreement. Any waiver must be in writing signed by the City.

ARTICLE 11 COMPENSATION

§ 11.1 For the Architect's Basic Services described under Article 3, the Owner shall compensate the Architect as follows:
(Insert amount of, or basis for, compensation.)

$ 112,500 (One Hundred Twelve Thousand Five Hundred Dollars)

§ 11.2 For Additional Services designated in Section 4.1, the Owner shall compensate the Architect as follows:
(Insert amount of, or basis for, compensation. If necessary, list specific services to which particular methods of compensation apply.)

Hourly. (See attached Rate Sheet)

§ 11.3 For Additional Services that may arise during the course of the Project, including those under Section 4.3, the Owner shall compensate the Architect as follows:
(Insert amount of, or basis for, compensation.)

Hourly. (See attached Rate Sheet)

§ 11.4 Compensation for Additional Services of the Architect's consultants when not included in Sections 11.2 or 11.3, shall be the amount invoiced to the Architect plus Fifteen percent (15 %), or as otherwise stated below:

AIA Document B133™ – 2014. Copyright © 2014 by The American Institute of Architects. All rights reserved. WARNING: This AIA® Document is protected by U.S. Copyright Law and International Treaties. Unauthorized reproduction or distribution of this AIA® Document, or any portion of it, may result in severe civil and criminal penalties, and will be prosecuted to the maximum extent possible under the law. This document was produced by AIA software at 09:28:04 on 11/11/2016 under Order No.1575871642_1 which expires on 02/08/2017, and is not for resale.
User Notes: (1482978134)

§ 11.5 Where compensation for Basic Services is based on a stipulated sum or percentage of the Cost of the Work, the compensation for each phase of services shall be as follows:

Schematic Design Phase	Ten	percent (	10	%)
Design Development Phase	Fifteen	percent (	15	%)
Construction Documents Phase	Fifty	percent (	50	%)
Construction Phase	Twenty Five	percent (	25	%)
Total Basic Compensation	one hundred	percent (	100	%)

The Owner acknowledges that with an accelerated Project delivery, multiple bid package process, or Construction Manager as constructor project delivery method, the Architect may be providing its services in multiple Phases simultaneously. Therefore, the Architect shall be permitted to invoice monthly in proportion to services performed in each Phase of Services as appropriate.

§ 11.6 When compensation is based on a percentage of the Cost of the Work and any portions of the Project are deleted or otherwise not constructed, compensation for those portions of the Project shall be payable to the extent services are performed on those portions, in accordance with the schedule set forth in Section 11.5 based on (1) the Owner-accepted Guaranteed Maximum Price Amendment or Control Estimate, as applicable, or (2) if the Guaranteed Maximum Price proposal or Control Estimate has not been accepted by the Owner, the most recent estimate of the Cost of the Work prepared by the Construction Manager for such portions of the Project. The Architect shall be entitled to compensation in accordance with this Agreement for all services performed whether or not the Construction Phase is commenced.

§ 11.7 The hourly billing rates for services of the Architect and the Architect's consultants, if any, are set forth below. The rates shall be adjusted in accordance with the Architect's and Architect's consultants' normal review practices.
(If applicable, attach an exhibit of hourly billing rates or insert them below.)

Hourly (See Attached Rate Sheet)

Employee or Category	**Rate ($0.00)**

§ 11.8 Compensation for Reimbursable Expenses
§ 11.8.1 Reimbursable Expenses are in addition to compensation for Basic and Additional Services and include expenses incurred by the Architect and the Architect's consultants directly related to the Project, as follows:

- **.1** Transportation and authorized out-of-town travel and subsistence;
- **.2** Long distance services, project dedicated data and communication services, teleconferences, Project Web sites, and extranets;
- **.3** Fees paid for securing approval of authorities having jurisdiction over the Project;
- **.4** Printing, reproductions, plots, standard form documents;
- **.5** Postage, handling and delivery;
- **.6** *Reserved*
- **.7** Renderings, models, mock-ups, professional photography, and presentation materials requested by the Owner;
- **.8** Architect's consultants' expense of professional liability insurance dedicated exclusively to this Project, or the expense of additional insurance coverage or limits if the Owner requests such insurance in excess of that normally carried by the Architect's consultants;
- **.9** All taxes levied on professional services and on reimbursable expenses;
- **.10** Site office expenses.

§ 11.8.2 For Reimbursable Expenses the compensation shall be the expenses incurred by the Architect and the Architect's consultants plus Fifteen percent (15 %) of the expenses incurred.

AIA Document B133™ – 2014. Copyright © 2014 by The American Institute of Architects. All rights reserved. WARNING: This AIA® Document is protected by U.S. Copyright Law and International Treaties. Unauthorized reproduction or distribution of this AIA® Document, or any portion of it, may result in severe civil and criminal penalties, and will be prosecuted to the maximum extent possible under the law. This document was produced by AIA software at 09:28:04 on 11/11/2016 under Order No.1575871642_1 which expires on 02/08/2017, and is not for resale.
User Notes:
(1482978134)

§ 11.8.3 If the insurance requirements listed in Section 2.6 exceed the types and limits the Architect normally maintains and the Architect incurred additional costs to satisfy such requirements, the Owner shall reimburse the Architect for such costs as set forth below:

N/A

§ 11.9 Compensation for Use of Architect's Instruments of Service
If the Owner terminates the Architect for its convenience under Section 9.5, or the Architect terminates this Agreement under Section 9.3, the Owner shall pay a licensing fee as compensation for the Owner's continued use of the Architect's Instruments of Service solely for purposes of completing, using and maintaining the Project as follows:

N/A

§ 11.10 Payments to the Architect
§ 11.10.1 An initial payment of zero ($ 0) shall be made upon execution of this Agreement and is the minimum payment under this Agreement. It shall be credited to the Owner's account in the final invoice.

§ 11.10.2 Payments for services shall be made monthly in proportion to services performed. Payments are due and payable within forty-five (45) days upon presentation of the Architect's invoice.
(Paragraphs deleted)

§ 11.10.3 *Reserved*

§ 11.10.4 Records of Reimbursable Expenses, expenses pertaining to Additional Services, and services performed on the basis of hourly rates shall be available to the Owner at mutually convenient times.

ARTICLE 12 SPECIAL TERMS AND CONDITIONS
Special terms and conditions that modify this Agreement are as follows:

N/A

ARTICLE 13 SCOPE OF THE AGREEMENT
§ 13.1 This Agreement represents the entire and integrated agreement between the Owner and the Architect and supersedes all prior negotiations, representations or agreements, either written or oral. This Agreement may be amended only by written instrument signed by both Owner and Architect.

§ 13.2 This Agreement is comprised of the following documents listed below:
.1 AIA Document B133™–2014, Standard Form Agreement Between Owner and Architect, Construction Manager as Constructor Edition

(Paragraphs deleted)
.2 Other documents:
(List other documents, if any, including additional scopes of service forming part of the Agreement.)
N/A

This Agreement entered into as of the day and year first written above.

OWNER *(Signature)*	**ARCHITECT** *(Signature)*
James Donchess, Mayor	William K. Davis Principal
(Printed name and title)	*(Printed name and title)*
City of Nashua, NH	Port One Architects Inc.

11/14/16

AIA Document B133™ – 2014. Copyright © 2014 by The American Institute of Architects. All rights reserved. WARNING: This AIA® Document is protected by U.S. Copyright Law and International Treaties. Unauthorized reproduction or distribution of this AIA® Document, or any portion of it, may result in severe civil and criminal penalties, and will be prosecuted to the maximum extent possible under the law. This document was produced by AIA software at 09:28:04 on 11/11/2016 under Order No.1575871642_1 which expires on 02/08/2017, and is not for resale.
User Notes:

PORT ONE ARCHITECTS

Fee Schedule

January 2016

Architectural Design Staff (1)

Principal Architect	$ 135.00
Senior Architect	$ 120.00
Project Manager	$ 100.00
Architectural Designer	$ 85.00
Clerical/Intern	$ 70.00

Consultants (subcontracted work)

Engineering Consultants	$ cost + 15%
Fire Protection/Code Consultants	$ cost + 15%
Hardware/Lighting/Food Service Consultants	$ cost + 15%
Interior Design	$ cost + 15%

Miscellaneous Reimbursable Expenses

CAD Plots	$ 0.80/sf
Telephone/Communications (3)	at 1% labor costs
Overnight Delivery Services	$ cost + 10%
Postage	$ cost + 10%
Reprographic Services	$ cost + 10%
Photography	$ cost + 10%
Mileage: Automobile (2)	$ 0.54/mile
Copies (b&w)	$ 0.10/each
Copies (color)	$ 0.50/each

Presentation Expenses

Mounted Color Presentation Boards	$ as quoted
Architectural Presentation Models	$ as quoted
3D Computer Renderings	$ as quoted
3D Computer Videos	$ as quoted

Notes

(1) Rates will be charged for time worked on the project and for the time required for travel between the office and the meeting or project site.

(2) Automobile mileage expense shall be periodically adjusted consistent with IRS allowances

(3) Telephone/Communications will be invoiced as a reimbursable expense at 1% of the total labor cost.

AIA® Document A133™ – 2009

Standard Form of Agreement Between Owner and Construction Manager as Constructor where the basis of payment is the Cost of the Work Plus a Fee with a Guaranteed Maximum Price

ADDITIONS AND DELETIONS:
The author of this document has added information needed for its completion. The author may also have revised the text of the original AIA standard form. An *Additions and Deletions Report* that notes added information as well as revisions to the standard form text is available from the author and should be reviewed. A vertical line in the left margin of this document indicates where the author has added necessary information and where the author has added to or deleted from the original AIA text.

This document has important legal consequences. Consultation with an attorney is encouraged with respect to its completion or modification.

AIA Document A201™–2007, General Conditions of the Contract for Construction, is adopted in this document by reference. Do not use with other general conditions unless this document is modified.

AGREEMENT made as of the 21st day of November in the year 2016
(In words, indicate day, month and year.)

BETWEEN the Owner:
(Name, legal status and address)

City Of Nashua New Hampshire
229 Main Street
Nashua, New Hampshire 03060

and the Construction Manager:
(Name, legal status and address)

Bonnette, Page & Stone Corp
91 Bisson Avenue
Laconia, NH 03246
Ph # 603-524-3411

for the following Project:
(Name and address or location)

Renovations and Addition to
Nashua Fire Station 3
124 Spit Brook Road
Nashua, New Hampshire 03060

The Architect:
(Name, legal status and address)

Port One Architects, Inc., Professional Corporation
959 Islington Street
Portsmouth, New Hampshire 03801

The Owner's Designated Representative:
(Name, address and other information)

Steven Galipeau, Fire Chief City of Nashua
70 East Hollis Street
Nashua, New Hampshire 03060

The Construction Manager's Designated Representative:
(Name, address and other information)

Keith McBey, President

Init.
/
AIA Document A133™ – 2009 (formerly A121™CMc – 2003). Copyright © 1991, 2003 and 2009 by The American Institute of Architects. All rights reserved.
WARNING: This AIA® Document is protected by U.S. Copyright Law and International Treaties. Unauthorized reproduction or distribution of this AIA® Document, or any portion of it, may result in severe civil and criminal penalties, and will be prosecuted to the maximum extent possible under the law.
This document was produced by AIA software at 14:07:26 on 11/18/2016 under Order No.7150521749_1 which expires on 10/03/2017, and is not for resale.
User Notes: (1936421746)

Email Address: randy@bpsnh.com

The Architect's Designated Representative:
(Name, address and other information)

Kelly Davis AIA
Port One Architects Inc.
959 Islington Street
Portsmouth, New Hampshire 03801

The Owner and Construction Manager agree as follows.

AIA Document A133™ – 2009 (formerly A121™CMc – 2003). Copyright © 1991, 2003 and 2009 by The American Institute of Architects. **All rights reserved.**
WARNING: This AIA® Document is protected by U.S. Copyright Law and International Treaties. Unauthorized reproduction or distribution of this AIA® Document, or any portion of it, may result in severe civil and criminal penalties, and will be prosecuted to the maximum extent possible under the law.
This document was produced by AIA software at 14:07:26 on 11/18/2016 under Order No.7150521749_1 which expires on 10/03/2017, and is not for resale.
User Notes: (1936421746)

TABLE OF ARTICLES

1 GENERAL PROVISIONS

2 CONSTRUCTION MANAGER'S RESPONSIBILITIES

3 OWNER'S RESPONSIBILITIES

4 COMPENSATION AND PAYMENTS FOR PRECONSTRUCTION PHASE SERVICES

5 COMPENSATION FOR CONSTRUCTION PHASE SERVICES

6 COST OF THE WORK FOR CONSTRUCTION PHASE

7 PAYMENTS FOR CONSTRUCTION PHASE SERVICES

8 INSURANCE AND BONDS

9 DISPUTE RESOLUTION

10 TERMINATION OR SUSPENSION

11 MISCELLANEOUS PROVISIONS

12 SCOPE OF THE AGREEMENT

EXHIBIT A GUARANTEED MAXIMUM PRICE AMENDMENT

ARTICLE 1 GENERAL PROVISIONS

§ 1.1 The Contract Documents

The Contract Documents consist of this Agreement, Conditions of the Contract (General, Supplementary and other Conditions), Drawings, Specifications, Bid documents, Addenda issued prior to the execution of this Agreement, other documents listed in this Agreement, and Modifications issued after execution of this Agreement, all of which form the Contract and are as fully a part of the Contract as if attached to this Agreement or repeated herein. Upon the Owner's acceptance of the Construction Manager's Guaranteed Maximum Price proposal, the Contract Documents will also include the documents described in Section 2.2.3 and identified in the Guaranteed Maximum Price Amendment and revisions prepared by the Architect and furnished by the Owner as described in Section 2.2.8. The Contract represents the entire and integrated agreement between the parties hereto and supersedes prior negotiations, representations or agreements, either written or oral. If anything in the other Contract Documents, other than a Modification, is inconsistent with this Agreement, this Agreement shall govern.

§ 1.2 Relationship of the Parties

The Construction Manager accepts the relationship of trust and confidence established by this Agreement and covenants with the Owner to cooperate with the Architect and exercise the Construction Manager's skill and judgment in furthering the interests of the Owner; to furnish efficient construction administration, management services and supervision; to furnish at all times an adequate supply of workers and materials; and to perform the Work in an expeditious and economical manner consistent with the Owner's interests. The Owner agrees to furnish or approve, in a timely manner, information required by the Construction Manager and to make payments to the Construction Manager in accordance with the requirements of the Contract Documents.

§ 1.3 General Conditions

For the Preconstruction Phase, AIA Document A201™–2007, General Conditions of the Contract for Construction, shall apply only as specifically provided in this Agreement. For the Construction Phase, the general conditions of the contract shall be as set forth in A201–2007, which document is incorporated herein by reference. The term "Contractor" as used in A201–2007 shall mean the Construction Manager.

AIA Document A133™ – 2009 (formerly A121™CMc – 2003). Copyright © 1991, 2003 and 2009 by The American Institute of Architects. **All rights reserved.**
WARNING: This AIA® Document is protected by U.S. Copyright Law and International Treaties. Unauthorized reproduction or distribution of this AIA® Document, or any portion of it, may result in severe civil and criminal penalties, and will be prosecuted to the maximum extent possible under the law.
This document was produced by AIA software at 14:07:26 on 11/18/2016 under Order No.7150521749_1 which expires on 10/03/2017, and is not for resale.
User Notes: (1936421746)

ARTICLE 2 CONSTRUCTION MANAGER'S RESPONSIBILITIES

The Construction Manager's Preconstruction Phase responsibilities are set forth in Sections 2.1 and 2.2. The Construction Manager's Construction Phase responsibilities are set forth in Section 2.3. The Owner and Construction Manager may agree, in consultation with the Architect, for the Construction Phase to commence prior to completion of the Preconstruction Phase, in which case, both phases will proceed concurrently. The Construction Manager shall identify a representative authorized to act on behalf of the Construction Manager with respect to the Project.

§ 2.1 Preconstruction Phase

§ 2.1.1 The Construction Manager shall provide a preliminary evaluation of the Owner's program, schedule and construction budget requirements, each in terms of the other.

§ 2.1.2 Consultation

The Construction Manager shall schedule and conduct meetings with the Architect and Owner to discuss such matters as procedures, progress, coordination, and scheduling of the Work. The Construction Manager shall advise the Owner and the Architect on proposed site use and improvements, selection of materials, and building systems and equipment. The Construction Manager shall also provide recommendations consistent with the Project requirements to the Owner and Architect on constructability; availability of materials and labor; time requirements for procurement, installation and construction; and factors related to construction cost including, but not limited to, costs of alternative designs or materials, preliminary budgets, life-cycle data, and possible cost reductions.

§ 2.1.3 When Project requirements in Section 3.1.1 have been sufficiently identified, the Construction Manager shall prepare and periodically update a Project schedule for the Architect's review and the Owner's acceptance. The Construction Manager shall obtain the Architect's approval for the portion of the Project schedule relating to the performance of the Architect's services. The Project schedule shall coordinate and integrate the Construction Manager's services, the Architect's services, other Owner consultants' services, and the Owner's responsibilities and identify items that could affect the Project's timely completion. The updated Project schedule shall include the following: submission of the Guaranteed Maximum Price proposal; components of the Work; times of commencement and completion required of each Subcontractor; ordering and delivery of products, including those that must be ordered well in advance of construction; and the occupancy requirements of the Owner.

§ 2.1.4 Phased Construction

The Construction Manager shall provide recommendations with regard to accelerated or fast-track scheduling, procurement, or phased construction. The Construction Manager shall take into consideration cost reductions, cost information, constructability, provisions for temporary facilities and procurement and construction scheduling issues.

§ 2.1.5 Preliminary Cost Estimates

§ 2.1.5.1 Based on the preliminary design and other design criteria prepared by the Architect, the Construction Manager shall prepare preliminary estimates of the Cost of the Work or the cost of program requirements using area, volume or similar conceptual estimating techniques for the Architect's review and Owner's approval. If the Architect or Construction Manager suggests alternative materials and systems, the Construction Manager shall provide cost evaluations of those alternative materials and systems.

§ 2.1.5.2 As the Architect progresses with the preparation of the Schematic Design, Design Development and Construction Documents, the Construction Manager shall prepare and update, at appropriate intervals agreed to by the Owner, Construction Manager and Architect, estimates of the Cost of the Work of increasing detail and refinement and allowing for the further development of the design until such time as the Owner and Construction Manager agree on a Guaranteed Maximum Price for the Work. Such estimates shall be provided for the Architect's review and the Owner's approval. The Construction Manager shall inform the Owner and Architect when estimates of the Cost of the Work exceed the latest approved Project budget and make recommendations for corrective action.

§ 2.1.6 Subcontractors and Suppliers

The Construction Manager shall develop bidders' interest in the Project.

§ 2.1.7 The Construction Manager shall prepare, for the Architect's review and the Owner's acceptance, a procurement schedule for items that must be ordered well in advance of construction. The Construction Manager

AIA Document A133™ – 2009 (formerly A121™CMc – 2003). Copyright © 1991, 2003 and 2009 by The American Institute of Architects. All rights reserved.
WARNING: This AIA® Document is protected by U.S. Copyright Law and International Treaties. Unauthorized reproduction or distribution of this AIA® Document, or any portion of it, may result in severe civil and criminal penalties, and will be prosecuted to the maximum extent possible under the law.
This document was produced by AIA software at 14:07:26 on 11/18/2016 under Order No.7150521749_1 which expires on 10/03/2017, and is not for resale.
User Notes: (1936421746)

shall expedite and coordinate the ordering and delivery of materials that must be ordered well in advance of construction. If the Owner agrees to procure any items prior to the establishment of the Guaranteed Maximum Price, the Owner shall procure the items on terms and conditions acceptable to the Construction Manager. Upon the establishment of the Guaranteed Maximum Price, the Owner shall assign all contracts for these items to the Construction Manager and the Construction Manager shall thereafter accept responsibility for them.

§ 2.1.8 Extent of Responsibility
The Construction Manager shall exercise reasonable care in preparing schedules and estimates. The Construction Manager, however, does not warrant or guarantee estimates and schedules except as may be included as part of the Guaranteed Maximum Price. The Construction Manager is not required to ascertain that the Drawings and Specifications are in accordance with applicable laws, statutes, ordinances, codes, rules and regulations, or lawful orders of public authorities, but the Construction Manager shall promptly report to the Architect and Owner any nonconformity discovered by or made known to the Construction Manager as a request for information in such form as the Architect may require.

§ 2.1.9 Notices and Compliance with Laws
The Construction Manager shall comply with applicable laws, statutes, ordinances, codes, rules and regulations, and lawful orders of public authorities applicable to its performance under this Contract, and with equal employment opportunity programs, and other programs as may be required by governmental and quasi governmental authorities for inclusion in the Contract Documents.

§ 2.2 Guaranteed Maximum Price Proposal and Contract Time
§ 2.2.1 At a time to be mutually agreed upon by the Owner and the Construction Manager and in consultation with the Architect, the Construction Manager shall prepare a Guaranteed Maximum Price proposal for the Owner's review and acceptance. The Guaranteed Maximum Price in the proposal shall be the sum of the Construction Manager's estimate of the Cost of the Work, including contingencies described in Section 2.2.4, and the Construction Manager's Fee.

§ 2.2.2 To the extent that the Drawings and Specifications are anticipated to require further development by the Architect, the Construction Manager shall provide in the Guaranteed Maximum Price for such further development consistent with the Contract Documents and reasonably inferable therefrom. Such further development does not include such things as changes in scope, systems, kinds and quality of materials, finishes or equipment, all of which, if required, shall be incorporated by Change Order.

§ 2.2.3 The Construction Manager shall include with the Guaranteed Maximum Price proposal a written statement of its basis, which shall include the following:

- **.1** A list of the Drawings and Specifications, including all Addenda thereto, and the Conditions of the Contract;
- **.2** A list of the clarifications and assumptions made by the Construction Manager in the preparation of the Guaranteed Maximum Price proposal, including assumptions under Section 2.2.2, to supplement the information provided by the Owner and contained in the Drawings and Specifications;
- **.3** A statement of the proposed Guaranteed Maximum Price, including a statement of the estimated Cost of the Work organized by trade categories or systems, allowances, contingency, and the Construction Manager's Fee;
- **.4** The anticipated date of Substantial Completion upon which the proposed Guaranteed Maximum Price is based; and
- **.5** A date by which the Owner must accept the Guaranteed Maximum Price.

§ 2.2.4 In preparing the Construction Manager's Guaranteed Maximum Price proposal, the Construction Manager shall include its contingency for the Construction Manager's exclusive use to cover those costs considered reimbursable as the Cost of the Work but not included in a Change Order.

§ 2.2.5 The Construction Manager shall meet with the Owner and Architect to review the Guaranteed Maximum Price proposal. In the event that the Owner and Architect discover any inconsistencies or inaccuracies in the information presented, they shall promptly notify the Construction Manager, who shall make appropriate adjustments to the Guaranteed Maximum Price proposal, its basis, or both.

AIA Document A133™ – 2009 (formerly A121™CMc – 2003). Copyright © 1991, 2003 and 2009 by The American Institute of Architects. **All rights reserved.**
WARNING: This AIA® Document is protected by U.S. Copyright Law and International Treaties. Unauthorized reproduction or distribution of this AIA® Document, or any portion of it, may result in severe civil and criminal penalties, and will be prosecuted to the maximum extent possible under the law.
This document was produced by AIA software at 14:07:26 on 11/18/2016 under Order No.7150521749_1 which expires on 10/03/2017, and is not for resale.
User Notes: (1936421746)

§ 2.2.6 If the Owner notifies the Construction Manager that the Owner has accepted the Guaranteed Maximum Price proposal in writing before the date specified in the Guaranteed Maximum Price proposal, the Guaranteed Maximum Price proposal shall be deemed effective without further acceptance from the Construction Manager. Following acceptance of a Guaranteed Maximum Price, the Owner and Construction Manager shall execute the Guaranteed Maximum Price Amendment amending this Agreement, a copy of which the Owner shall provide to the Architect. The Guaranteed Maximum Price Amendment shall set forth the agreed upon Guaranteed Maximum Price with the information and assumptions upon which it is based.

§ 2.2.7 The Construction Manager shall not incur any cost to be reimbursed as part of the Cost of the Work prior to the commencement of the Construction Phase, unless the Owner provides prior written authorization for such costs.

§ 2.2.8 The Owner shall authorize the Architect to provide the revisions to the Drawings and Specifications to incorporate the agreed upon assumptions and clarifications contained in the Guaranteed Maximum Price Amendment. The Owner shall promptly furnish those revised Drawings and Specifications to the Construction Manager as they are revised. The Construction Manager shall notify the Owner and Architect of any inconsistencies between the Guaranteed Maximum Price Amendment and the revised Drawings and Specifications.

§ 2.2.9 The Construction Manager shall include in the Guaranteed Maximum Price all sales, consumer, use and similar taxes for the Work provided by the Construction Manager that are legally enacted, whether or not yet effective, at the time the Guaranteed Maximum Price Amendment is executed.

§ 2.3 Construction Phase

§ 2.3.1 General

§ 2.3.1.1 For purposes of Section 8.1.2 of A201–2007, the date of commencement of the Work shall mean the date of commencement of the Construction Phase.

§ 2.3.1.2 The Construction Phase shall commence upon the Owner's acceptance of the Construction Manager's Guaranteed Maximum Price proposal or the Owner's issuance of a Notice to Proceed, whichever occurs earlier.

§ 2.3.2 Administration

§ 2.3.2.1 Those portions of the Work that the Construction Manager does not customarily perform with the Construction Manager's own personnel shall be performed under subcontracts or by other appropriate agreements with the Construction Manager. The Owner may designate specific persons from whom, or entities from which, the Construction Manager shall obtain bids. The Construction Manager shall obtain bids from Subcontractors and from suppliers of materials or equipment fabricated especially for the Work and shall deliver such bids to the Architect. The Owner shall then determine, with the advice of the Construction Manager and the Architect, which bids will be accepted. The Construction Manager shall not be required to contract with anyone to whom the Construction Manager has reasonable objection.

§ 2.3.2.2 If the Guaranteed Maximum Price has been established and when a specific bidder (1) is recommended to the Owner by the Construction Manager, (2) is qualified to perform that portion of the Work, and (3) has submitted a bid that conforms to the requirements of the Contract Documents without reservations or exceptions, but the Owner requires that another bid be accepted, then the Construction Manager may require that a Change Order be issued to adjust the Contract Time and the Guaranteed Maximum Price by the difference between the bid of the person or entity recommended to the Owner by the Construction Manager and the amount and time requirement of the subcontract or other agreement actually signed with the person or entity designated by the Owner.

§ 2.3.2.3 Subcontracts or other agreements shall conform to the applicable payment provisions of this Agreement, and shall not be awarded on the basis of cost plus a fee without the prior consent of the Owner. If the Subcontract is awarded on a cost plus a fee basis, the Construction Manager shall provide in the Subcontract for the Owner to receive the same audit rights with regard to the Subcontractor as the Owner receives with regard to the Construction Manager in Section 6.11 below.

§ 2.3.2.4 If the Construction Manager recommends a specific bidder that may be considered a "related party" according to Section 6.10, then the Construction Manager shall promptly notify the Owner in writing of such relationship and notify the Owner of the specific nature of the contemplated transaction, according to Section 6.10.2.

AIA Document A133™ – 2009 (formerly A121™CMc – 2003). Copyright © 1991, 2003 and 2009 by The American Institute of Architects. **All rights reserved.**
WARNING: This AIA® Document is protected by U.S. Copyright Law and International Treaties. Unauthorized reproduction or distribution of this AIA® Document, or any portion of it, may result in severe civil and criminal penalties, and will be prosecuted to the maximum extent possible under the law.
This document was produced by AIA software at 14:07:26 on 11/18/2016 under Order No.7150521749_1 which expires on 10/03/2017, and is not for resale.
User Notes: (1936421746)

§ 2.3.2.5 The Construction Manager shall schedule and conduct meetings to discuss such matters as procedures, progress, coordination, scheduling, and status of the Work. The Construction Manager shall prepare and promptly distribute minutes to the Owner and Architect.

§ 2.3.2.6 Upon the execution of the Guaranteed Maximum Price Amendment, the Construction Manager shall prepare and submit to the Owner and Architect a construction schedule for the Work and submittal schedule in accordance with Section 3.10 of A201–2007.

§ 2.3.2.7 The Construction Manager shall record the progress of the Project. On a monthly basis, or otherwise as agreed to by the Owner, the Construction Manager shall submit written progress reports to the Owner and Architect, showing percentages of completion and other information required by the Owner. The Construction Manager shall also keep, and make available to the Owner and Architect, a daily log containing a record for each day of weather, portions of the Work in progress, number of workers on site, identification of equipment on site, problems that might affect progress of the work, accidents, injuries, and other information required by the Owner.

§ 2.3.2.8 The Construction Manager shall develop a system of cost control for the Work, including regular monitoring of actual costs for activities in progress and estimates for uncompleted tasks and proposed changes. The Construction Manager shall identify variances between actual and estimated costs and report the variances to the Owner and Architect and shall provide this information in its monthly reports to the Owner and Architect, in accordance with Section 2.3.2.7 above.

§ 2.4 Professional Services
Section 3.12.10 of A201–2007 shall apply to both the Preconstruction and Construction Phases.

§ 2.5 Hazardous Materials
Section 10.3 of A201–2007 shall apply to both the Preconstruction and Construction Phases.

ARTICLE 3 OWNER'S RESPONSIBILITIES

§ 3.1 Information and Services Required of the Owner
§ 3.1.1 The Owner shall provide information with reasonable promptness, regarding requirements for and limitations on the Project, including a written program which shall set forth the Owner's objectives, constraints, and criteria, including schedule, space requirements and relationships, flexibility and expandability, special equipment, systems, sustainability and site requirements.

§ 3.1.2 Prior to the execution of the Guaranteed Maximum Price Amendment, the Construction Manager may request in writing that the Owner provide reasonable evidence that the Owner has made financial arrangements to fulfill the Owner's obligations under the Contract. Thereafter, the Construction Manager may only request such evidence if (1) the Owner fails to make payments to the Construction Manager as the Contract Documents require, (2) a change in the Work materially changes the Contract Sum, or (3) the Construction Manager identifies in writing a reasonable concern regarding the Owner's ability to make payment when due. The Owner shall furnish such evidence as a condition precedent to commencement or continuation of the Work or the portion of the Work affected by a material change. After the Owner furnishes the evidence, the Owner shall not materially vary such financial arrangements without prior notice to the Construction Manager and Architect.

§ 3.1.3 The Owner shall establish and periodically update the Owner's budget for the Project, including (1) the budget for the Cost of the Work as defined in Section 6.1.1, (2) the Owner's other costs, and (3) reasonable contingencies related to all of these costs. If the Owner significantly increases or decreases the Owner's budget for the Cost of the Work, the Owner shall notify the Construction Manager and Architect. The Owner and the Architect, in consultation with the Construction Manager, shall thereafter agree to a corresponding change in the Project's scope and quality.

§ 3.1.4 Structural and Environmental Tests, Surveys and Reports. During the Preconstruction Phase, the Owner shall furnish the following information or services with reasonable promptness. The Owner shall also furnish any other information or services under the Owner's control and relevant to the Construction Manager's performance of the Work with reasonable promptness after receiving the Construction Manager's written request for such information or services. The Construction Manager shall be entitled to rely on the accuracy of information and services furnished by the Owner but shall exercise proper precautions relating to the safe performance of the Work.

AIA Document A133™ – 2009 (formerly A121™CMc – 2003). Copyright © 1991, 2003 and 2009 by The American Institute of Architects. **All rights reserved.**
WARNING: This AIA® Document is protected by U.S. Copyright Law and International Treaties. Unauthorized reproduction or distribution of this AIA® Document, or any portion of it, may result in severe civil and criminal penalties, and will be prosecuted to the maximum extent possible under the law.
This document was produced by AIA software at 14:07:26 on 11/18/2016 under Order No.7150521749_1 which expires on 10/03/2017, and is not for resale.
User Notes: (1936421746)

§ 3.1.4.1 The Owner shall furnish tests, inspections and reports required by law and as otherwise agreed to by the parties, such as structural, mechanical, and chemical tests, tests for air and water pollution, and tests for hazardous materials.

§ 3.1.4.2 The Owner shall furnish surveys describing physical characteristics, legal limitations and utility locations for the site of the Project, and a legal description of the site. The surveys and legal information shall include, as applicable, grades and lines of streets, alleys, pavements and adjoining property and structures; designated wetlands; adjacent drainage; rights-of-way, restrictions, easements, encroachments, zoning, deed restrictions, boundaries and contours of the site; locations, dimensions and necessary data with respect to existing buildings, other improvements and trees; and information concerning available utility services and lines, both public and private, above and below grade, including inverts and depths. All the information on the survey shall be referenced to a Project benchmark.

§ 3.1.4.3 The Owner, when such services are requested, shall furnish services of geotechnical engineers, which may include but are not limited to test borings, test pits, determinations of soil bearing values, percolation tests, evaluations of hazardous materials, seismic evaluation, ground corrosion tests and resistivity tests, including necessary operations for anticipating subsoil conditions, with written reports and appropriate recommendations.

§ 3.1.4.4 During the Construction Phase, the Owner shall furnish information or services required of the Owner by the Contract Documents with reasonable promptness. The Owner shall also furnish any other information or services under the Owner's control and relevant to the Construction Manager's performance of the Work with reasonable promptness after receiving the Construction Manager's written request for such information or services.

§ 3.2 Owner's Designated Representative
The Owner shall identify a representative authorized to act on behalf of the Owner with respect to the Project. The Owner's representative shall render decisions promptly and furnish information expeditiously, so as to avoid unreasonable delay in the services or Work of the Construction Manager. Except as otherwise provided in Section 4.2.1 of A201–2007, the Architect does not have such authority. The term "Owner" means the Owner or the Owner's authorized representative.

§ 3.2.1 Legal Requirements. The Owner shall furnish all legal and accounting services, including auditing services, that may be reasonably necessary at any time for the Project to meet the Owner's needs and interests.

§ 3.3 Architect
The Owner shall retain an Architect to provide services, duties, and responsibilities as described in AIA Document B133™–2014, Standard Form of Agreement Between Owner and Architect, Construction Manager as Constructor Edition. The Owner shall provide the Construction Manager a copy of the executed agreement between the Owner and the Architect, and any further modifications to the agreement.

ARTICLE 4 COMPENSATION AND PAYMENTS FOR PRECONSTRUCTION PHASE SERVICES

§ 4.1 Compensation
§ 4.1.1 For the Construction Manager's Preconstruction Phase services, the Owner shall compensate the Construction Manager as follows:

§ 4.1.2 For the Construction Manager's Preconstruction Phase services described in Sections 2.1 and 2.2:
(Insert amount of, or basis for, compensation and include a list of reimbursable cost items, as applicable.)

N/A

§ 4.1.3 If the Preconstruction Phase services covered by this Agreement have not been completed within ( ) months of the date of this Agreement, through no fault of the Construction Manager, the Construction Manager's compensation for Preconstruction Phase services shall be equitably adjusted.

§ 4.1.4 Compensation based on Direct Personnel Expense includes the direct salaries of the Construction Manager's personnel providing Preconstruction Phase services on the Project and the Construction Manager's costs for the mandatory and customary contributions and benefits related thereto, such as employment taxes and other statutory employee benefits, insurance, sick leave, holidays, vacations, employee retirement plans and similar contributions.

AIA Document A133™ – 2009 (formerly A121™CMc – 2003). Copyright © 1991, 2003 and 2009 by The American Institute of Architects. **All rights reserved.**
WARNING: This AIA® Document is protected by U.S. Copyright Law and International Treaties. Unauthorized reproduction or distribution of this AIA® Document, or any portion of it, may result in severe civil and criminal penalties, and will be prosecuted to the maximum extent possible under the law.
This document was produced by AIA software at 14:07:26 on 11/18/2016 under Order No.7150521749_1 which expires on 10/03/2017, and is not for resale.
User Notes: (1936421746)

§ 4.2 Payments
§ 4.2.1 Unless otherwise agreed, payments for services shall be made monthly in proportion to services performed.

§ 4.2.2 Payments are due and payable
(Paragraphs deleted)
within 30 days of the Construction Manager's invoice.

ARTICLE 5 COMPENSATION FOR CONSTRUCTION PHASE SERVICES
§ 5.1 For the Construction Manager's performance of the Work as described in Section 2.3, the Owner shall pay the Construction Manager the Contract Sum in current funds. The Contract Sum is the Cost of the Work as defined in Section 6.1.1 plus the Construction Manager's Fee.

§ 5.1.1 The Construction Manager's Fee:
(State a lump sum, percentage of Cost of the Work or other provision for determining the Construction Manager's Fee.)

The Construction Managers fee shall be 2.9% based on the costs of construction as defined in Article 6. The CM fee shall be fixed as a lump sum at the establishment of the GMP

§ 5.1.2 The method of adjustment of the Construction Manager's Fee for changes in the Work:

§ 5.1.3 Limitations, if any, on a Subcontractor's overhead and profit for increases in the cost of its portion of the Work:

§ 5.1.4 Rental rates for Construction Manager-owned equipment shall not exceed percent (%) of the standard rate paid at the place of the Project.

§ 5.1.5 Unit prices, if any:
(Identify and state the unit price; state the quantity limitations, if any, to which the unit price will be applicable.)

Item	Units and Limitations	Price per Unit ($0.00)
TBD		

§ 5.2 Guaranteed Maximum Price
§ 5.2.1 The Construction Manager guarantees that the Contract Sum shall not exceed the Guaranteed Maximum Price set forth in the Guaranteed Maximum Price Amendment, as it is amended from time to time. To the extent the Cost of the Work exceeds the Guaranteed Maximum Price, the Construction Manager shall bear such costs in excess of the Guaranteed Maximum Price without reimbursement or additional compensation from the Owner.
(Insert specific provisions if the Construction Manager is to participate in any savings.)

Any project savings shall be returned to the owner at the completion of the project.

§ 5.2.2 The Guaranteed Maximum Price is subject to additions and deductions by Change Order as provided in the Contract Documents and the Date of Substantial Completion shall be subject to adjustment as provided in the Contract Documents.

§ 5.3 Changes in the Work
§ 5.3.1 The Owner may, without invalidating the Contract, order changes in the Work within the general scope of the Contract consisting of additions, deletions or other revisions. The Owner shall issue such changes in writing. The Architect may make minor changes in the Work as provided in Section 7.4 of AIA Document A201–2007, General Conditions of the Contract for Construction. The Construction Manager shall be entitled to an equitable adjustment in the Contract Time as a result of changes in the Work.

AIA Document A133™ – 2009 (formerly A121™CMc – 2003). Copyright © 1991, 2003 and 2009 by The American Institute of Architects. **All rights reserved.**
WARNING: This AIA® Document is protected by U.S. Copyright Law and International Treaties. Unauthorized reproduction or distribution of this AIA® Document, or any portion of it, may result in severe civil and criminal penalties, and will be prosecuted to the maximum extent possible under the law.
This document was produced by AIA software at 14:07:26 on 11/18/2016 under Order No.7150521749_1 which expires on 10/03/2017, and is not for resale.
User Notes: (1936421746)

§ 5.3.2 Adjustments to the Guaranteed Maximum Price on account of changes in the Work subsequent to the execution of the Guaranteed Maximum Price Amendment may be determined by any of the methods listed in Section 7.3.3 of AIA Document A201–2007, General Conditions of the Contract for Construction.

§ 5.3.3 In calculating adjustments to subcontracts (except those awarded with the Owner's prior consent on the basis of cost plus a fee), the terms "cost" and "fee" as used in Section 7.3.3.3 of AIA Document A201–2007 and the term "costs" as used in Section 7.3.7 of AIA Document A201–2007 shall have the meanings assigned to them in AIA Document A201–2007 and shall not be modified by Sections 5.1 and 5.2, Sections 6.1 through 6.7, and Section 6.8 of this Agreement. Adjustments to subcontracts awarded with the Owner's prior consent on the basis of cost plus a fee shall be calculated in accordance with the terms of those subcontracts.

§ 5.3.4 In calculating adjustments to the Guaranteed Maximum Price, the terms "cost" and "costs" as used in the above-referenced provisions of AIA Document A201–2007 shall mean the Cost of the Work as defined in Sections 6.1 to 6.7 of this Agreement and the term "fee" shall mean the Construction Manager's Fee as defined in Section 5.1 of this Agreement.

§ 5.3.5 If no specific provision is made in Section 5.1.2 for adjustment of the Construction Manager's Fee in the case of changes in the Work, or if the extent of such changes is such, in the aggregate, that application of the adjustment provisions of Section 5.1.2 will cause substantial inequity to the Owner or Construction Manager, the Construction Manager's Fee shall be equitably adjusted on the same basis that was used to establish the Fee for the original Work, and the Guaranteed Maximum Price shall be adjusted accordingly.

ARTICLE 6 COST OF THE WORK FOR CONSTRUCTION PHASE

§ 6.1 Costs to Be Reimbursed

§ 6.1.1 The term Cost of the Work shall mean costs necessarily incurred by the Construction Manager in the proper performance of the Work. Such costs shall be at rates not higher than the standard paid at the place of the Project except with prior consent of the Owner. The Cost of the Work shall include only the items set forth in Sections 6.1 through 6.7.

§ 6.1.2 Where any cost is subject to the Owner's prior approval, the Construction Manager shall obtain this approval prior to incurring the cost. The parties shall endeavor to identify any such costs prior to executing Guaranteed Maximum Price Amendment.

§ 6.2 Labor Costs

§ 6.2.1 Wages of construction workers directly employed by the Construction Manager to perform the construction of the Work at the site or, with the Owner's prior approval, at off-site workshops.

§ 6.2.2 Wages or salaries of the Construction Manager's supervisory and administrative personnel when stationed at the site with the Owner's prior approval.
(If it is intended that the wages or salaries of certain personnel stationed at the Construction Manager's principal or other offices shall be included in the Cost of the Work, identify in Section 11.5, the personnel to be included, whether for all or only part of their time, and the rates at which their time will be charged to the Work.)

§ 6.2.3 Wages and salaries of the Construction Manager's supervisory or administrative personnel engaged at factories, workshops or on the road, in expediting the production or transportation of materials or equipment required for the Work, but only for that portion of their time required for the Work.

§ 6.2.4 Costs paid or incurred by the Construction Manager for taxes, insurance, contributions, assessments and benefits required by law or collective bargaining agreements and, for personnel not covered by such agreements, customary benefits such as sick leave, medical and health benefits, holidays, vacations and pensions, provided such costs are based on wages and salaries included in the Cost of the Work under Sections 6.2.1 through 6.2.3.

§ 6.2.5 Bonuses, profit sharing, incentive compensation and any other discretionary payments paid to anyone hired by the Construction Manager or paid to any Subcontractor or vendor, with the Owner's prior approval.

AIA Document A133™ – 2009 (formerly A121™CMc – 2003). Copyright © 1991, 2003 and 2009 by The American Institute of Architects. **All rights reserved.**
WARNING: This AIA® Document is protected by U.S. Copyright Law and International Treaties. Unauthorized reproduction or distribution of this AIA® Document, or any portion of it, may result in severe civil and criminal penalties, and will be prosecuted to the maximum extent possible under the law.
This document was produced by AIA software at 14:07:26 on 11/18/2016 under Order No.7150521749_1 which expires on 10/03/2017, and is not for resale.
User Notes: (1936421746)

§ 6.3 Subcontract Costs
Payments made by the Construction Manager to Subcontractors in accordance with the requirements of the subcontracts.

§ 6.4 Costs of Materials and Equipment Incorporated in the Completed Construction
§ 6.4.1 Costs, including transportation and storage, of materials and equipment incorporated or to be incorporated in the completed construction.

§ 6.4.2 Costs of materials described in the preceding Section 6.4.1 in excess of those actually installed to allow for reasonable waste and spoilage. Unused excess materials, if any, shall become the Owner's property at the completion of the Work or, at the Owner's option, shall be sold by the Construction Manager. Any amounts realized from such sales shall be credited to the Owner as a deduction from the Cost of the Work.

§ 6.5 Costs of Other Materials and Equipment, Temporary Facilities and Related Items
§ 6.5.1 Costs of transportation, storage, installation, maintenance, dismantling and removal of materials, supplies, temporary facilities, machinery, equipment and hand tools not customarily owned by construction workers that are provided by the Construction Manager at the site and fully consumed in the performance of the Work. Costs of materials, supplies, temporary facilities, machinery, equipment and tools that are not fully consumed shall be based on the cost or value of the item at the time it is first used on the Project site less the value of the item when it is no longer used at the Project site. Costs for items not fully consumed by the Construction Manager shall mean fair market value.

§ 6.5.2 Rental charges for temporary facilities, machinery, equipment and hand tools not customarily owned by construction workers that are provided by the Construction Manager at the site and costs of transportation, installation, minor repairs, dismantling and removal. The total rental cost of any Construction Manager-owned item may not exceed the purchase price of any comparable item. Rates of Construction Manager-owned equipment and quantities of equipment shall be subject to the Owner's prior approval.

§ 6.5.3 Costs of removal of debris from the site of the Work and its proper and legal disposal.

§ 6.5.4 Costs of document reproductions, facsimile transmissions and long-distance telephone calls, postage and parcel delivery charges, telephone service at the site and reasonable petty cash expenses of the site office.

§ 6.5.5 That portion of the reasonable expenses of the Construction Manager's supervisory or administrative personnel incurred while traveling in discharge of duties connected with the Work.

§ 6.5.6 Costs of materials and equipment suitably stored off the site at a mutually acceptable location, subject to the Owner's prior approval.

§ 6.6 Miscellaneous Costs
§ 6.6.1 Premiums for that portion of insurance and bonds required by the Contract Documents that can be directly attributed to this Contract. Self-insurance for either full or partial amounts of the coverages required by the Contract Documents, with the Owner's prior approval.

§ 6.6.2 Sales, use or similar taxes imposed by a governmental authority that are related to the Work and for which the Construction Manager is liable.

§ 6.6.3 Fees and assessments for the building permit and for other permits, licenses and inspections for which the Construction Manager is required by the Contract Documents to pay.

§ 6.6.4 Fees of laboratories for tests required by the Contract Documents, except those related to defective or nonconforming Work for which reimbursement is excluded by Section 13.5.3 of AIA Document A201–2007 or by other provisions of the Contract Documents, and which do not fall within the scope of Section 6.7.3.

§ 6.6.5 Royalties and license fees paid for the use of a particular design, process or product required by the Contract Documents; the cost of defending suits or claims for infringement of patent rights arising from such requirement of the Contract Documents; and payments made in accordance with legal judgments against the Construction Manager

AIA Document A133™ – 2009 (formerly A121™CMc – 2003). Copyright © 1991, 2003 and 2009 by The American Institute of Architects. **All rights reserved.**
WARNING: This AIA® Document is protected by U.S. Copyright Law and International Treaties. Unauthorized reproduction or distribution of this AIA® Document, or any portion of it, may result in severe civil and criminal penalties, and will be prosecuted to the maximum extent possible under the law.
This document was produced by AIA software at 14:07:26 on 11/18/2016 under Order No.7150521749_1 which expires on 10/03/2017, and is not for resale.
User Notes: (1936421746)

resulting from such suits or claims and payments of settlements made with the Owner's consent. However, such costs of legal defenses, judgments and settlements shall not be included in the calculation of the Construction Manager's Fee or subject to the Guaranteed Maximum Price. If such royalties, fees and costs are excluded by the last sentence of Section 3.17 of AIA Document A201–2007 or other provisions of the Contract Documents, then they shall not be included in the Cost of the Work.

§ 6.6.6 Costs for electronic equipment and software, directly related to the Work with the Owner's prior approval.

§ 6.6.7 Deposits lost for causes other than the Construction Manager's negligence or failure to fulfill a specific responsibility in the Contract Documents.

(Paragraph deleted)
§

§ 6.6.9 Subject to the Owner's prior approval, expenses incurred in accordance with the Construction Manager's standard written personnel policy for relocation and temporary living allowances of the Construction Manager's personnel required for the Work.

§ 6.7 Other Costs and Emergencies
§ 6.7.1 Other costs incurred in the performance of the Work if, and to the extent, approved in advance in writing by the Owner.

§ 6.7.2 Costs incurred in taking action to prevent threatened damage, injury or loss in case of an emergency affecting the safety of persons and property, as provided in Section 10.4 of AIA Document A201–2007.

§ 6.7.3 Costs of repairing or correcting damaged or nonconforming Work executed by the Construction Manager, Subcontractors or suppliers, provided that such damaged or nonconforming Work was not caused by negligence or failure to fulfill a specific responsibility of the Construction Manager and only to the extent that the cost of repair or correction is not recovered by the Construction Manager from insurance, sureties, Subcontractors, suppliers, or others.

§ 6.7.4 The costs described in Sections 6.1 through 6.7 shall be included in the Cost of the Work, notwithstanding any provision of AIA Document A201–2007 or other Conditions of the Contract which may require the Construction Manager to pay such costs, unless such costs are excluded by the provisions of Section 6.8.

§ 6.8 Costs Not To Be Reimbursed
§ 6.8.1 The Cost of the Work shall not include the items listed below:

- **.1** Salaries and other compensation of the Construction Manager's personnel stationed at the Construction Manager's principal office or offices other than the site office, except as specifically provided in Section 6.2, or as may be provided in Article 11;
- **.2** Expenses of the Construction Manager's principal office and offices other than the site office;
- **.3** Overhead and general expenses, except as may be expressly included in Sections 6.1 to 6.7;
- **.4** The Construction Manager's capital expenses, including interest on the Construction Manager's capital employed for the Work;
- **.5** Except as provided in Section 6.7.3 of this Agreement, costs due to the negligence or failure of the Construction Manager, Subcontractors and suppliers or anyone directly or indirectly employed by any of them or for whose acts any of them may be liable to fulfill a specific responsibility of the Contract;
- **.6** Any cost not specifically and expressly described in Sections 6.1 to 6.7;
- **.7** Costs, other than costs included in Change Orders approved by the Owner, that would cause the Guaranteed Maximum Price to be exceeded; and
- **.8** Costs for services incurred during the Preconstruction Phase.

§ 6.9 Discounts, Rebates and Refunds
§ 6.9.1 Cash discounts obtained on payments made by the Construction Manager shall accrue to the Owner if (1) before making the payment, the Construction Manager included them in an Application for Payment and received payment from the Owner, or (2) the Owner has deposited funds with the Construction Manager with which to make payments; otherwise, cash discounts shall accrue to the Construction Manager. Trade discounts, rebates, refunds and

AIA Document A133™ – 2009 (formerly A121™CMc – 2003). Copyright © 1991, 2003 and 2009 by The American Institute of Architects. **All rights reserved.**
WARNING: This AIA® Document is protected by U.S. Copyright Law and International Treaties. Unauthorized reproduction or distribution of this AIA® Document, or any portion of it, may result in severe civil and criminal penalties, and will be prosecuted to the maximum extent possible under the law.
This document was produced by AIA software at 14:07:26 on 11/18/2016 under Order No.7150521749_1 which expires on 10/03/2017, and is not for resale.
User Notes: (1936421746)

amounts received from sales of surplus materials and equipment shall accrue to the Owner, and the Construction Manager shall make provisions so that they can be obtained.

§ 6.9.2 Amounts that accrue to the Owner in accordance with the provisions of Section 6.9.1 shall be credited to the Owner as a deduction from the Cost of the Work.

§ 6.10 Related Party Transactions

§ 6.10.1 For purposes of Section 6.10, the term "related party" shall mean a parent, subsidiary, affiliate or other entity having common ownership or management with the Construction Manager; any entity in which any stockholder in, or management employee of, the Construction Manager owns any interest in excess of ten percent in the aggregate; or any person or entity which has the right to control the business or affairs of the Construction Manager. The term "related party" includes any member of the immediate family of any person identified above.

§ 6.10.2 If any of the costs to be reimbursed arise from a transaction between the Construction Manager and a related party, the Construction Manager shall notify the Owner of the specific nature of the contemplated transaction, including the identity of the related party and the anticipated cost to be incurred, before any such transaction is consummated or cost incurred. If the Owner, after such notification, authorizes the proposed transaction, then the cost incurred shall be included as a cost to be reimbursed, and the Construction Manager shall procure the Work, equipment, goods or service from the related party, as a Subcontractor, according to the terms of Sections 2.3.2.1, 2.3.2.2 and 2.3.2.3. If the Owner fails to authorize the transaction, the Construction Manager shall procure the Work, equipment, goods or service from some person or entity other than a related party according to the terms of Sections 2.3.2.1, 2.3.2.2 and 2.3.2.3.

§ 6.11 Accounting Records

The Construction Manager shall keep full and detailed records and accounts related to the cost of the Work and exercise such controls as may be necessary for proper financial management under this Contract and to substantiate all costs incurred. The accounting and control systems shall be satisfactory to the Owner. The Owner and the Owner's auditors shall, during regular business hours and upon reasonable notice, be afforded access to, and shall be permitted to audit and copy, the Construction Manager's records and accounts, including complete documentation supporting accounting entries, books, correspondence, instructions, drawings, receipts, subcontracts, Subcontractor's proposals, purchase orders, vouchers, memoranda and other data relating to this Contract. The Construction Manager shall preserve these records for a period of three years after final payment, or for such longer period as may be required by law.

ARTICLE 7 PAYMENTS FOR CONSTRUCTION PHASE SERVICES

§ 7.1 Progress Payments

§ 7.1.1 Based upon Applications for Payment submitted to the Architect by the Construction Manager and Certificates for Payment issued by the Architect, the Owner shall make progress payments on account of the Contract Sum to the Construction Manager as provided below and elsewhere in the Contract Documents.

§ 7.1.2 The period covered by each Application for Payment shall be one calendar month ending on the last day of the month, or as follows:

§ 7.1.3 Provided that an Application for Payment is received by the Architect not later than the 25th day of a month, the Owner shall make payment of the certified amount to the Construction Manager not later than the 25th day of the following month. If an Application for Payment is received by the Architect after the application date fixed above, payment shall be made by the Owner not later than thirty (30) days after the Architect receives the Application for Payment.
(Federal, state or local laws may require payment within a certain period of time.)

§ 7.1.4 With each Application for Payment, the Construction Manager shall submit payrolls, petty cash accounts, receipted invoices or invoices with check vouchers attached, and any other evidence required by the Owner or Architect to demonstrate that cash disbursements already made by the Construction Manager on account of the Cost of the Work equal or exceed progress payments already received by the Construction Manager, less that portion of

AIA Document A133™ – 2009 (formerly A121™CMc – 2003). Copyright © 1991, 2003 and 2009 by The American Institute of Architects. **All rights reserved.**
WARNING: This AIA® Document is protected by U.S. Copyright Law and International Treaties. Unauthorized reproduction or distribution of this AIA® Document, or any portion of it, may result in severe civil and criminal penalties, and will be prosecuted to the maximum extent possible under the law.
This document was produced by AIA software at 14:07:26 on 11/18/2016 under Order No.7150521749_1 which expires on 10/03/2017, and is not for resale.
User Notes: (1936421746)

those payments attributable to the Construction Manager's Fee, plus payrolls for the period covered by the present Application for Payment.

§ 7.1.5 Each Application for Payment shall be based on the most recent schedule of values submitted by the Construction Manager in accordance with the Contract Documents. The schedule of values shall allocate the entire Guaranteed Maximum Price among the various portions of the Work, except that the Construction Manager's Fee shall be shown as a single separate item. The schedule of values shall be prepared in such form and supported by such data to substantiate its accuracy as the Architect may require. This schedule, unless objected to by the Architect, shall be used as a basis for reviewing the Construction Manager's Applications for Payment.

§ 7.1.6 Applications for Payment shall show the percentage of completion of each portion of the Work as of the end of the period covered by the Application for Payment. The percentage of completion shall be the lesser of (1) the percentage of that portion of the Work which has actually been completed, or (2) the percentage obtained by dividing (a) the expense that has actually been incurred by the Construction Manager on account of that portion of the Work for which the Construction Manager has made or intends to make actual payment prior to the next Application for Payment by (b) the share of the Guaranteed Maximum Price allocated to that portion of the Work in the schedule of values.

§ 7.1.7 Subject to other provisions of the Contract Documents, the amount of each progress payment shall be computed as follows:

.1 Take that portion of the Guaranteed Maximum Price properly allocable to completed Work as determined by multiplying the percentage of completion of each portion of the Work by the share of the Guaranteed Maximum Price allocated to that portion of the Work in the schedule of values. Pending final determination of cost to the Owner of changes in the Work, amounts not in dispute shall be included as provided in Section 7.3.9 of AIA Document A201–2007;

.2 Add that portion of the Guaranteed Maximum Price properly allocable to materials and equipment delivered and suitably stored at the site for subsequent incorporation in the Work, or if approved in advance by the Owner, suitably stored off the site at a location agreed upon in writing;

.3 Add the Construction Manager's Fee, less retainage of five percent (5 %). The Construction Manager's Fee shall be computed upon the Cost of the Work at the rate stated in Section 5.1 or, if the Construction Manager's Fee is stated as a fixed sum in that Section, shall be an amount that bears the same ratio to that fixed-sum fee as the Cost of the Work bears to a reasonable estimate of the probable Cost of the Work upon its completion;

.4 Subtract retainage of five percent (5 %) from that portion of the Work that the Construction Manager self-performs;

.5 Subtract the aggregate of previous payments made by the Owner;

.6 Subtract the shortfall, if any, indicated by the Construction Manager in the documentation required by Section 7.1.4 to substantiate prior Applications for Payment, or resulting from errors subsequently discovered by the Owner's auditors in such documentation; and

.7 Subtract amounts, if any, for which the Architect has withheld or nullified a Certificate for Payment as provided in Section 9.5 of AIA Document A201–2007.

§ 7.1.8 The Owner and Construction Manager shall agree upon (1) a mutually acceptable procedure for review and approval of payments to Subcontractors and (2) the percentage of retainage held on Subcontracts, and the Construction Manager shall execute subcontracts in accordance with those agreements.

§ 7.1.9 Except with the Owner's prior approval, the Construction Manager shall not make advance payments to suppliers for materials or equipment which have not been delivered and stored at the site.

§ 7.1.10 In taking action on the Construction Manager's Applications for Payment, the Architect shall be entitled to rely on the accuracy and completeness of the information furnished by the Construction Manager and shall not be deemed to represent that the Architect has made a detailed examination, audit or arithmetic verification of the documentation submitted in accordance with Section 7.1.4 or other supporting data; that the Architect has made exhaustive or continuous on-site inspections; or that the Architect has made examinations to ascertain how or for what purposes the Construction Manager has used amounts previously paid on account of the Contract. Such examinations, audits and verifications, if required by the Owner, will be performed by the Owner's auditors acting in the sole interest of the Owner.

AIA Document A133™ – 2009 (formerly A121™CMc – 2003). Copyright © 1991, 2003 and 2009 by The American Institute of Architects. **All rights reserved.**
WARNING: This AIA® Document is protected by U.S. Copyright Law and International Treaties. Unauthorized reproduction or distribution of this AIA® Document, or any portion of it, may result in severe civil and criminal penalties, and will be prosecuted to the maximum extent possible under the law.
This document was produced by AIA software at 14:07:26 on 11/18/2016 under Order No.7150521749_1 which expires on 10/03/2017, and is not for resale.
User Notes: (1936421746)

§ 7.2 Final Payment

§ 7.2.1 Final payment, constituting the entire unpaid balance of the Contract Sum, shall be made by the Owner to the Construction Manager when

.1 the Construction Manager has fully performed the Contract except for the Construction Manager's responsibility to correct Work as provided in Section 12.2.2 of AIA Document A201–2007, and to satisfy other requirements, if any, which extend beyond final payment;

.2 the Construction Manager has submitted a final accounting for the Cost of the Work and a final Application for Payment; and

.3 a final Certificate for Payment has been issued by the Architect.

The Owner's final payment to the Construction Manager shall be made no later than 30 days after the issuance of the Architect's final Certificate for Payment, or as follows:

§ 7.2.2 The Owner's auditors will review and report in writing on the Construction Manager's final accounting within 30 days after delivery of the final accounting to the Architect by the Construction Manager. Based upon such Cost of the Work as the Owner's auditors report to be substantiated by the Construction Manager's final accounting, and provided the other conditions of Section 7.2.1 have been met, the Architect will, within seven days after receipt of the written report of the Owner's auditors, either issue to the Owner a final Certificate for Payment with a copy to the Construction Manager, or notify the Construction Manager and Owner in writing of the Architect's reasons for withholding a certificate as provided in Section 9.5.1 of the AIA Document A201–2007. The time periods stated in this Section supersede those stated in Section 9.4.1 of the AIA Document A201–2007. The Architect is not responsible for verifying the accuracy of the Construction Manager's final accounting.

§ 7.2.3 If the Owner's auditors report the Cost of the Work as substantiated by the Construction Manager's final accounting to be less than claimed by the Construction Manager, the Construction Manager shall be entitled to request mediation of the disputed amount without seeking an initial decision pursuant to Section 15.2 of A201–2007. A request for mediation shall be made by the Construction Manager within 30 days after the Construction Manager's receipt of a copy of the Architect's final Certificate for Payment. Failure to request mediation within this 30-day period shall result in the substantiated amount reported by the Owner's auditors becoming binding on the Construction Manager. Pending a final resolution of the disputed amount, the Owner shall pay the Construction Manager the amount certified in the Architect's final Certificate for Payment.

§ 7.2.4 If, subsequent to final payment and at the Owner's request, the Construction Manager incurs costs described in Section 6.1.1 and not excluded by Section 6.8 to correct defective or nonconforming Work, the Owner shall reimburse the Construction Manager such costs and the Construction Manager's Fee applicable thereto on the same basis as if such costs had been incurred prior to final payment, but not in excess of the Guaranteed Maximum Price. If the Construction Manager has participated in savings as provided in Section 5.2.1, the amount of such savings shall be recalculated and appropriate credit given to the Owner in determining the net amount to be paid by the Owner to the Construction Manager.

ARTICLE 8 INSURANCE AND BONDS

For all phases of the Project, the Construction Manager shall purchase and maintain insurance, and the Construction Manager shall provide bonds as set forth in Article 11 of AIA Document A201–2007.
(State bonding requirements, if any, and limits of liability for insurance required in Article 11 of AIA Document A201–2007.)

Type of Insurance or Bond	Limit of Liability or Bond Amount ($0.00)
Performance & Payment Bonds	100% of construction GMP
Automobile Liability	$ 1,000,000.00 each accident
Commercial General Liability	$ 1,000,000.00 each occurrence, $ 2,000,000.00 Aggregate
General Liability Umbrella	$ 10,000,000.00
Property Insurance shall be by owner	$ 1,000.00 deductible per occurrence

Init.
/
AIA Document A133™ – 2009 (formerly A121™CMc – 2003). Copyright © 1991, 2003 and 2009 by The American Institute of Architects. All rights reserved.
WARNING: This AIA® Document is protected by U.S. Copyright Law and International Treaties. Unauthorized reproduction or distribution of this AIA® Document, or any portion of it, may result in severe civil and criminal penalties, and will be prosecuted to the maximum extent possible under the law.
This document was produced by AIA software at 14:07:26 on 11/18/2016 under Order No.7150521749_1 which expires on 10/03/2017, and is not for resale.
User Notes: (1936421746)

ARTICLE 9 DISPUTE RESOLUTION

§ 9.1 Any Claim between the Owner and Construction Manager shall be resolved in accordance with the provisions set forth in this Article 9 and Article 15 of A201–2007. However, for Claims arising from or relating to the Construction Manager's Preconstruction Phase services, no decision by the Initial Decision Maker shall be required as a condition precedent to mediation or binding dispute resolution, and Section 9.3 of this Agreement shall not apply.

§ 9.2 For any Claim subject to, but not resolved by mediation pursuant to Section 15.3 of AIA Document A201–2007, the method of binding dispute resolution shall be as follows:
(Check the appropriate box. If the Owner and Construction Manager do not select a method of binding dispute resolution below, or do not subsequently agree in writing to a binding dispute resolution method other than litigation, Claims will be resolved by litigation in a court of competent jurisdiction.)

[X] Arbitration pursuant to Section 15.4 of AIA Document A201–2007

[ ] Litigation in a court of competent jurisdiction

[ ] Other: *(Specify)*

§ 9.3 Initial Decision Maker

The Architect will serve as the Initial Decision Maker pursuant to Section 15.2 of AIA Document A201–2007 for Claims arising from or relating to the Construction Manager's Construction Phase services, unless the parties appoint below another individual, not a party to the Agreement, to serve as the Initial Decision Maker.
(If the parties mutually agree, insert the name, address and other contact information of the Initial Decision Maker, if other than the Architect.)

ARTICLE 10 TERMINATION OR SUSPENSION

§ 10.1 Termination Prior to Establishment of the Guaranteed Maximum Price

§ 10.1.1 Prior to the execution of the Guaranteed Maximum Price Amendment, the Owner may terminate this Agreement upon not less than seven days' written notice to the Construction Manager for the Owner's convenience and without cause, and the Construction Manager may terminate this Agreement, upon not less than seven days' written notice to the Owner, for the reasons set forth in Section 14.1.1 of A201–2007.

§ 10.1.2 In the event of termination of this Agreement pursuant to Section 10.1.1, the Construction Manager shall be equitably compensated for Preconstruction Phase services performed prior to receipt of a notice of termination. In no event shall the Construction Manager's compensation under this Section exceed the compensation set forth in Section 4.1.

§ 10.1.3 If the Owner terminates the Contract pursuant to Section 10.1.1 after the commencement of the Construction Phase but prior to the execution of the Guaranteed Maximum Price Amendment, the Owner shall pay to the Construction Manager an amount calculated as follows, which amount shall be in addition to any compensation paid to the Construction Manager under Section 10.1.2:

.1 Take the Cost of the Work incurred by the Construction Manager to the date of termination;

.2 Add the Construction Manager's Fee computed upon the Cost of the Work to the date of termination at the rate stated in Section 5.1 or, if the Construction Manager's Fee is stated as a fixed sum in that Section, an amount that bears the same ratio to that fixed-sum Fee as the Cost of the Work at the time of termination bears to a reasonable estimate of the probable Cost of the Work upon its completion; and

.3 Subtract the aggregate of previous payments made by the Owner for Construction Phase services.

AIA Document A133™ – 2009 (formerly A121™CMc – 2003). Copyright © 1991, 2003 and 2009 by The American Institute of Architects. **All rights reserved.**
WARNING: This AIA® Document is protected by U.S. Copyright Law and International Treaties. Unauthorized reproduction or distribution of this AIA® Document, or any portion of it, may result in severe civil and criminal penalties, and will be prosecuted to the maximum extent possible under the law.
This document was produced by AIA software at 14:07:26 on 11/18/2016 under Order No.7150521749_1 which expires on 10/03/2017, and is not for resale.
User Notes: (1936421746)

The Owner shall also pay the Construction Manager fair compensation, either by purchase or rental at the election of the Owner, for any equipment owned by the Construction Manager which the Owner elects to retain and which is not otherwise included in the Cost of the Work under Section 10.1.3.1. To the extent that the Owner elects to take legal assignment of subcontracts and purchase orders (including rental agreements), the Construction Manager shall, as a condition of receiving the payments referred to in this Article 10, execute and deliver all such papers and take all such steps, including the legal assignment of such subcontracts and other contractual rights of the Construction Manager, as the Owner may require for the purpose of fully vesting in the Owner the rights and benefits of the Construction Manager under such subcontracts or purchase orders. All Subcontracts, purchase orders and rental agreements entered into by the Construction Manager will contain provisions allowing for assignment to the Owner as described above.

If the Owner accepts assignment of subcontracts, purchase orders or rental agreements as described above, the Owner will reimburse or indemnify the Construction Manager for all costs arising under the subcontract, purchase order or rental agreement, if those costs would have been reimbursable as Cost of the Work if the contract had not been terminated. If the Owner chooses not to accept assignment of any subcontract, purchase order or rental agreement that would have constituted a Cost of the Work had this agreement not been terminated, the Construction Manager will terminate the subcontract, purchase order or rental agreement and the Owner will pay the Construction Manager the costs necessarily incurred by the Construction Manager because of such termination.

§ 10.2 Termination Subsequent to Establishing Guaranteed Maximum Price
Following execution of the Guaranteed Maximum Price Amendment and subject to the provisions of Section 10.2.1 and 10.2.2 below, the Contract may be terminated as provided in Article 14 of AIA Document A201–2007.

§ 10.2.1 If the Owner terminates the Contract after execution of the Guaranteed Maximum Price Amendment, the amount payable to the Construction Manager pursuant to Sections 14.2 and 14.4 of A201–2007 shall not exceed the amount the Construction Manager would otherwise have received pursuant to Sections 10.1.2 and 10.1.3 of this Agreement.

§ 10.2.2 If the Construction Manager terminates the Contract after execution of the Guaranteed Maximum Price Amendment, the amount payable to the Construction Manager under Section 14.1.3 of A201–2007 shall not exceed the amount the Construction Manager would otherwise have received under Sections 10.1.2 and 10.1.3 above, except that the Construction Manager's Fee shall be calculated as if the Work had been fully completed by the Construction Manager, utilizing as necessary a reasonable estimate of the Cost of the Work for Work not actually completed.

§ 10.3 Suspension
The Work may be suspended by the Owner as provided in Article 14 of AIA Document A201–2007. In such case, the Guaranteed Maximum Price and Contract Time shall be increased as provided in Section 14.3.2 of AIA Document A201–2007, except that the term "profit" shall be understood to mean the Construction Manager's Fee as described in Sections 5.1 and 5.3.5 of this Agreement.

ARTICLE 11 MISCELLANEOUS PROVISIONS
§ 11.1 Terms in this Agreement shall have the same meaning as those in A201–2007.

§ 11.2 Ownership and Use of Documents
Section 1.5 of A201–2007 shall apply to both the Preconstruction and Construction Phases.

§ 11.3 Governing Law
Section 13.1 of A201–2007 shall apply to both the Preconstruction and Construction Phases.

§ 11.4 Assignment
The Owner and Construction Manager, respectively, bind themselves, their agents, successors, assigns and legal representatives to this Agreement. Neither the Owner nor the Construction Manager shall assign this Agreement without the written consent of the other, except that the Owner may assign this Agreement to a lender providing financing for the Project if the lender agrees to assume the Owner's rights and obligations under this Agreement. Except as provided in Section 13.2.2 of A201–2007, neither party to the Contract shall assign the Contract as a

AIA Document A133™ – 2009 (formerly A121™CMc – 2003). Copyright © 1991, 2003 and 2009 by The American Institute of Architects. **All rights reserved.**
WARNING: This AIA® Document is protected by U.S. Copyright Law and International Treaties. Unauthorized reproduction or distribution of this AIA® Document, or any portion of it, may result in severe civil and criminal penalties, and will be prosecuted to the maximum extent possible under the law.
This document was produced by AIA software at 14:07:26 on 11/18/2016 under Order No.7150521749_1 which expires on 10/03/2017, and is not for resale.
User Notes: (1936421746)

whole without written consent of the other. If either party attempts to make such an assignment without such consent, that party shall nevertheless remain legally responsible for all obligations under the Contract.

§ 11.5 Other provisions:

ARTICLE 12 SCOPE OF THE AGREEMENT

§ 12.1 This Agreement represents the entire and integrated agreement between the Owner and the Construction Manager and supersedes all prior negotiations, representations or agreements, either written or oral. This Agreement may be amended only by written instrument signed by both Owner and Construction Manager.

§ 12.2 The following documents comprise the Agreement:

.1 AIA Document A133–2009, Standard Form of Agreement Between Owner and Construction Manager as Constructor where the basis of payment is the Cost of the Work Plus a Fee with a Guaranteed Maximum Price

.2 AIA Document A201–2007, General Conditions of the Contract for Construction

.3 AIA Document E201™–2007, Digital Data Protocol Exhibit, if completed, or the following:

.4 AIA Document E202™–2008, Building Information Modeling Protocol Exhibit, if completed, or the following:

.5 Other documents:
(List other documents, if any, forming part of the Agreement.)

List bid documents (These will all be summarized on Attachment A once developed)

This Agreement is entered into as of the day and year first written above.

OWNER *(Signature)*	**CONSTRUCTION MANAGER** *(Signature)*
(Printed name and title)	Keith McBey, President *(Printed name and title)*

AIA Document A133™ – 2009 (formerly A121™CMc – 2003). Copyright © 1991, 2003 and 2009 by The American Institute of Architects. **All rights reserved.**
WARNING: This AIA® Document is protected by U.S. Copyright Law and International Treaties. Unauthorized reproduction or distribution of this AIA® Document, or any portion of it, may result in severe civil and criminal penalties, and will be prosecuted to the maximum extent possible under the law.
This document was produced by AIA software at 14:07:26 on 11/18/2016 under Order No.7150521749_1 which expires on 10/03/2017, and is not for resale.
User Notes: (1936421746)

Additions and Deletions Report for

AIA® Document A133™ – 2009

This Additions and Deletions Report, as defined on page 1 of the associated document, reproduces below all text the author has added to the standard form AIA document in order to complete it, as well as any text the author may have added to or deleted from the original AIA text. Added text is shown underlined. Deleted text is indicated with a horizontal line through the original AIA text.

Note: This Additions and Deletions Report is provided for information purposes only and is not incorporated into or constitute any part of the associated AIA document. This Additions and Deletions Report and its associated document were generated simultaneously by AIA software at 14:07:26 on 11/18/2016.

PAGE 1

AGREEMENT made as of the 21st day of November in the year 2016

...

City Of Nashua New Hampshire
229 Main Street
Nashua, New Hampshire 03060

...

Bonnette, Page & Stone Corp
91 Bisson Avenue
Laconia, NH 03246
Ph # 603-524-3411

...

Renovations and Addition to
Nashua Fire Station 3
124 Spit Brook Road
Nashua, New Hampshire 03060

...

Port One Architects, Inc., Professional Corporation
959 Islington Street
Portsmouth, New Hampshire 03801

...

Steven Galipeau, Fire Chief City of Nashua
70 East Hollis Street
Nashua, New Hampshire 03060

...

Keith McBey, President

PAGE 2

Email Address: randy@bpsnh.com

Additions and Deletions Report for AIA Document A133™ – 2009 (formerly A121™CMc – 2003). Copyright © 1991, 2003 and 2009 by The American Institute of Architects. **All rights reserved. WARNING: This AIA® Document is protected by U.S. Copyright Law and International Treaties. Unauthorized reproduction or distribution of this AIA® Document, or any portion of it, may result in severe civil and criminal penalties, and will be prosecuted to the maximum extent possible under the law.** This document was produced by AIA software at 14:07:26 on 11/18/2016 under Order No.7150521749_1 which expires on 10/03/2017, and is not for resale.
User Notes: (1936421746)

...

Kelly Davis AIA
Port One Architects Inc.
959 Islington Street
Portsmouth, New Hampshire 03801

PAGE 3

The Contract Documents consist of this Agreement, Conditions of the Contract (General, Supplementary and other Conditions), Drawings, Specifications, Bid documents, Addenda issued prior to the execution of this Agreement, other documents listed in this Agreement, and Modifications issued after execution of this Agreement, all of which form the Contract and are as fully a part of the Contract as if attached to this Agreement or repeated herein. Upon the Owner's acceptance of the Construction Manager's Guaranteed Maximum Price proposal, the Contract Documents will also include the documents described in Section 2.2.3 and identified in the Guaranteed Maximum Price Amendment and revisions prepared by the Architect and furnished by the Owner as described in Section 2.2.8. The Contract represents the entire and integrated agreement between the parties hereto and supersedes prior negotiations, representations or agreements, either written or oral. If anything in the other Contract Documents, other than a Modification, is inconsistent with this Agreement, this Agreement shall govern.

PAGE 8

§ 3.2.1 Legal Requirements. The Owner shall furnish all ~~legal, insurance~~ legal and accounting services, including auditing services, that may be reasonably necessary at any time for the Project to meet the Owner's needs and interests.

...

N/A

PAGE 9

§ 4.2.2 Payments are due and payable ~~upon presentation of the Construction Manager's invoice. Amounts unpaid ( ) days after the invoice date shall bear interest at the rate entered below, or in the absence thereof at the legal rate prevailing from time to time at the principal place of business of the Construction Manager.~~
~~*(Insert rate of monthly or annual interest agreed upon.)*~~

~~%~~ within 30 days of the Construction Manager's invoice.

...

The Construction Managers fee shall be 2.9% based on the costs of construction as defined in Article 6. The CM fee shall be fixed as a lump sum at the establishment of the GMP

...

TBD

...

Any project savings shall be returned to the owner at the completion of the project.

PAGE 12

~~**§ 6.6.8** Legal, mediation and arbitration costs, including attorneys' fees, other than those arising from disputes between the Owner and Construction Manager, reasonably incurred by the Construction Manager after the execution~~

Additions and Deletions Report for AIA Document A133™ – 2009 (formerly A121™CMc – 2003). Copyright © 1991, 2003 and 2009 by The American Institute of Architects. **All rights reserved. WARNING: This AIA® Document is protected by U.S. Copyright Law and International Treaties. Unauthorized reproduction or distribution of this AIA® Document, or any portion of it, may result in severe civil and criminal penalties, and will be prosecuted to the maximum extent possible under the law.** This document was produced by AIA software at 14:07:26 on 11/18/2016 under Order No.7150521749_1 which expires on 10/03/2017, and is not for resale.
User Notes: (1936421746)

~~of this Agreement in the performance of the Work and with the Owner's prior approval, which shall not be unreasonably withheld.~~

§

PAGE 13

§ 7.1.3 Provided that an Application for Payment is received by the Architect not later than the 25th day of a month, the Owner shall make payment of the certified amount to the Construction Manager not later than the 25th day of the following month. If an Application for Payment is received by the Architect after the application date fixed above, payment shall be made by the Owner not later than thirty (30) days after the Architect receives the Application for Payment.

PAGE 14

.3 Add the Construction Manager's Fee, less retainage of five percent (5 %). The Construction Manager's Fee shall be computed upon the Cost of the Work at the rate stated in Section 5.1 or, if the Construction Manager's Fee is stated as a fixed sum in that Section, shall be an amount that bears the same ratio to that fixed-sum fee as the Cost of the Work bears to a reasonable estimate of the probable Cost of the Work upon its completion;

.4 Subtract retainage of five percent (5 %) from that portion of the Work that the Construction Manager self-performs;

PAGE 15

For all phases of the Project, the Construction Manager ~~and the Owner~~ shall purchase and maintain insurance, and the Construction Manager shall provide bonds as set forth in Article 11 of AIA Document A201–2007.

...

Performance & Payment Bonds	100% of construction GMP
Automobile Liability	$ 1,000,000.00 each accident
Commercial General Liability	$ 1,000,000.00 each occurrence, $ 2,000,000.00 Aggregate
General Liability Umbrella	$ 10,000,000.00
Property Insurance shall be by owner	$ 1,000.00 deductible per occurrence

PAGE 16

[X] Arbitration pursuant to Section 15.4 of AIA Document A201–2007

PAGE 18

List bid documents (These will all be summarized on Attachment A once developed)

...

Keith McBey, President

Additions and Deletions Report for AIA Document A133™ – 2009 (formerly A121™CMc – 2003). Copyright © 1991, 2003 and 2009 by The American Institute of Architects. **All rights reserved. WARNING: This AIA® Document is protected by U.S. Copyright Law and International Treaties. Unauthorized reproduction or distribution of this AIA® Document, or any portion of it, may result in severe civil and criminal penalties, and will be prosecuted to the maximum extent possible under the law.** This document was produced by AIA software at 14:07:26 on 11/18/2016 under Order No.7150521749_1 which expires on 10/03/2017, and is not for resale.
User Notes: (1936421746)

Certification of Document's Authenticity

AIA® Document D401™ – 2003

I, Keith McBey, hereby certify, to the best of my knowledge, information and belief, that I created the attached final document simultaneously with its associated Additions and Deletions Report and this certification at 14:07:26 on 11/18/2016 under Order No. 7150521749_1 from AIA Contract Documents software and that in preparing the attached final document I made no changes to the original text of AIA® Document A133™ – 2009, Standard Form of Agreement Between Owner and Construction Manager as Constructor where the basis of payment is the Cost of the Work Plus a Fee with a Guaranteed Maximum Price, as published by the AIA in its software, other than those additions and deletions shown in the associated Additions and Deletions Report.

_____

(Signed)

_____

(Title)

_____

(Dated)

AIA Document D401™ – 2003. Copyright © 1992 and 2003 by The American Institute of Architects. **All rights reserved. WARNING: This AIA® Document is protected by U.S. Copyright Law and International Treaties. Unauthorized reproduction or distribution of this AIA® Document, or any portion of it, may result in severe civil and criminal penalties, and will be prosecuted to the maximum extent possible under the law.** This document was produced by AIA software at 14:07:26 on 11/18/2016 under Order No.7150521749_1 which expires on 10/03/2017, and is not for resale.
User Notes: (1936421746)

AIA® Document A201™ – 2007

General Conditions of the Contract for Construction

for the following PROJECT:
(Name and location or address)
Nashua Fire Station # 3- Spit Brook Road

THE OWNER:
(Name, legal status and address)
City Of Nashua
229 Main Street
Nashua, NH 03060

THE ARCHITECT:
(Name, legal status and address)
Port One Architects
959 Islington Street
Portsmouth, NH 03801

ADDITIONS AND DELETIONS:
The author of this document has added information needed for its completion. The author may also have revised the text of the original AIA standard form. An *Additions and Deletions Report* that notes added information as well as revisions to the standard form text is available from the author and should be reviewed. A vertical line in the left margin of this document indicates where the author has added necessary information and where the author has added to or deleted from the original AIA text.

This document has important legal consequences. Consultation with an attorney is encouraged with respect to its completion or modification.

TABLE OF ARTICLES

1 GENERAL PROVISIONS

2 OWNER

3 CONTRACTOR

4 ARCHITECT

5 SUBCONTRACTORS

6 CONSTRUCTION BY OWNER OR BY SEPARATE CONTRACTORS

7 CHANGES IN THE WORK

8 TIME

9 PAYMENTS AND COMPLETION

10 PROTECTION OF PERSONS AND PROPERTY

11 INSURANCE AND BONDS

12 UNCOVERING AND CORRECTION OF WORK

13 MISCELLANEOUS PROVISIONS

14 TERMINATION OR SUSPENSION OF THE CONTRACT

15 CLAIMS AND DISPUTES

Init.
/

AIA Document A201™ – 2007. Copyright © 1911, 1915, 1918, 1925, 1937, 1951, 1958, 1961, 1963, 1966, 1970, 1976, 1987, 1997 and 2007 by The American Institute of Architects. **All rights reserved. WARNING: This AIA® Document is protected by U.S. Copyright Law and International Treaties. Unauthorized reproduction or distribution of this AIA® Document, or any portion of it, may result in severe civil and criminal penalties, and will be prosecuted to the maximum extent possible under the law.** This document was produced by AIA software at 08:39:36 on 11/21/2016 under Order No.7150521749_1 which expires on 10/03/2017, and is not for resale.
User Notes: (844049242)

INDEX
(Topics and numbers in bold are section headings.)

Acceptance of Nonconforming Work
9.6.6, 9.9.3, **12.3**
Acceptance of Work
9.6.6, 9.8.2, 9.9.3, 9.10.1, 9.10.3, 12.3
Access to Work
3.16, 6.2.1, 12.1
Accident Prevention
10
Acts and Omissions
3.2, 3.3.2, 3.12.8, 3.18, 4.2.3, 8.3.1, 9.5.1, 10.2.5, 10.2.8, 13.4.2, 13.7, 14.1, 15.2
Addenda
1.1.1, 3.11
Additional Costs, Claims for
3.7.4, 3.7.5, 6.1.1, 7.3.7.5, 10.3, 15.1.4
Additional Inspections and Testing
9.4.2, 9.8.3, 12.2.1, **13.5**
Additional Insured
11.1.4
Additional Time, Claims for
3.2.4, 3.7.4, 3.7.5, 3.10.2, 8.3.2, **15.1.5**
Administration of the Contract
3.1.3, **4.2**, 9.4, 9.5
Advertisement or Invitation to Bid
1.1.1
Aesthetic Effect
4.2.13
Allowances
3.8, 7.3.8
All-risk Insurance
11.3.1, 11.3.1.1
Applications for Payment
4.2.5, 7.3.9, 9.2, **9.3**, 9.4, 9.5.1, 9.6.3, 9.7, 9.10, 11.1.3
Approvals
2.1.1, 2.2.2, 2.4, 3.1.3, 3.10.2, 3.12.8, 3.12.9, 3.12.10, 4.2.7, 9.3.2, 13.5.1
Arbitration
8.3.1, 11.3.10, 13.1, 15.3.2, **15.4**
ARCHITECT
4
Architect, Definition of
4.1.1
Architect, Extent of Authority
2.4, 3.12.7, 4.1, 4.2, 5.2, 6.3, 7.1.2, 7.3.7, 7.4, 9.2, 9.3.1, 9.4, 9.5, 9.6.3, 9.8, 9.10.1, 9.10.3, 12.1, 12.2.1, 13.5.1, 13.5.2, 14.2.2, 14.2.4, 15.1.3, 15.2.1
Architect, Limitations of Authority and Responsibility
2.1.1, 3.12.4, 3.12.8, 3.12.10, 4.1.2, 4.2.1, 4.2.2, 4.2.3, 4.2.6, 4.2.7, 4.2.10, 4.2.12, 4.2.13, 5.2.1, 7.4, 9.4.2, 9.5.3, 9.6.4, 15.1.3, 15.2
Architect's Additional Services and Expenses
2.4, 11.3.1.1, 12.2.1, 13.5.2, 13.5.3, 14.2.4
Architect's Administration of the Contract
3.1.3, 4.2, 3.7.4, 15.2, 9.4.1, 9.5
Architect's Approvals
2.4, 3.1.3, 3.5, 3.10.2, 4.2.7
Architect's Authority to Reject Work
3.5, 4.2.6, 12.1.2, 12.2.1
Architect's Copyright
1.1.7, 1.5
Architect's Decisions
3.7.4, 4.2.6, 4.2.7, 4.2.11, 4.2.12, 4.2.13, 4.2.14, 6.3, 7.3.7, 7.3.9, 8.1.3, 8.3.1, 9.2, 9.4.1, 9.5, 9.8.4, 9.9.1, 13.5.2, 15.2, 15.3
Architect's Inspections
3.7.4, 4.2.2, 4.2.9, 9.4.2, 9.8.3, 9.9.2, 9.10.1, 13.5
Architect's Instructions
3.2.4, 3.3.1, 4.2.6, 4.2.7, 13.5.2
Architect's Interpretations
4.2.11, 4.2.12
Architect's Project Representative
4.2.10
Architect's Relationship with Contractor
1.1.2, 1.5, 3.1.3, 3.2.2, 3.2.3, 3.2.4, 3.3.1, 3.4.2, 3.5, 3.7.4, 3.7.5, 3.9.2, 3.9.3, 3.10, 3.11, 3.12, 3.16, 3.18, 4.1.2, 4.1.3, 4.2, 5.2, 6.2.2, 7, 8.3.1, 9.2, 9.3, 9.4, 9.5, 9.7, 9.8, 9.9, 10.2.6, 10.3, 11.3.7, 12, 13.4.2, 13.5, 15.2
Architect's Relationship with Subcontractors
1.1.2, 4.2.3, 4.2.4, 4.2.6, 9.6.3, 9.6.4, 11.3.7
Architect's Representations
9.4.2, 9.5.1, 9.10.1
Architect's Site Visits
3.7.4, 4.2.2, 4.2.9, 9.4.2, 9.5.1, 9.9.2, 9.10.1, 13.5
Asbestos
10.3.1
Attorneys' Fees
3.18.1, 9.10.2, 10.3.3
Award of Separate Contracts
6.1.1, 6.1.2
Award of Subcontracts and Other Contracts for Portions of the Work
5.2
Basic Definitions
1.1
Bidding Requirements
1.1.1, 5.2.1, 11.4.1
Binding Dispute Resolution
9.7, 11.3.9, 11.3.10, 13.1, 15.2.5, 15.2.6.1, 15.3.1, 15.3.2, 15.4.1
Boiler and Machinery Insurance
11.3.2
Bonds, Lien
7.3.7.4, 9.10.2, 9.10.3
Bonds, Performance, and Payment
7.3.7.4, 9.6.7, 9.10.3, 11.3.9, **11.4**

AIA Document A201™ – 2007. Copyright © 1911, 1915, 1918, 1925, 1937, 1951, 1958, 1961, 1963, 1966, 1970, 1976, 1987, 1997 and 2007 by The American Institute of Architects. **All rights reserved. WARNING: This AIA® Document is protected by U.S. Copyright Law and International Treaties. Unauthorized reproduction or distribution of this AIA® Document, or any portion of it, may result in severe civil and criminal penalties, and will be prosecuted to the maximum extent possible under the law.** This document was produced by AIA software at 08:39:36 on 11/21/2016 under Order No.7150521749_1 which expires on 10/03/2017, and is not for resale.
User Notes:
(844049242)

Building Permit
3.7.1
Capitalization
1.3
Certificate of Substantial Completion
9.8.3, 9.8.4, 9.8.5
Certificates for Payment
4.2.1, 4.2.5, 4.2.9, 9.3.3, **9.4**, 9.5, 9.6.1, 9.6.6, 9.7, 9.10.1, 9.10.3, 14.1.1.3, 14.2.4, 15.1.3
Certificates of Inspection, Testing or Approval
13.5.4
Certificates of Insurance
9.10.2, 11.1.3
Change Orders
1.1.1, 2.4, 3.4.2, 3.7.4, 3.8.2.3, 3.11, 3.12.8, 4.2.8, 5.2.3, 7.1.2, 7.1.3, **7.2**, 7.3.2, 7.3.6, 7.3.9, 7.3.10, 8.3.1, 9.3.1.1, 9.10.3, 10.3.2, 11.3.1.2, 11.3.4, 11.3.9, 12.1.2, 15.1.3
Change Orders, Definition of
7.2.1
CHANGES IN THE WORK
2.2.1, 3.11, 4.2.8, **7**, 7.2.1, 7.3.1, 7.4, 8.3.1, 9.3.1.1, 11.3.9
Claims, Definition of
15.1.1
CLAIMS AND DISPUTES
3.2.4, 6.1.1, 6.3, 7.3.9, 9.3.3, 9.10.4, 10.3.3, **15**, 15.4
Claims and Timely Assertion of Claims
15.4.1
Claims for Additional Cost
3.2.4, 3.7.4, 6.1.1, 7.3.9, 10.3.2, **15.1.4**
Claims for Additional Time
3.2.4, 3.7.4, 6.1.1, 8.3.2, 10.3.2, **15.1.5**
Concealed or Unknown Conditions, Claims for
3.7.4
Claims for Damages
3.2.4, 3.18, 6.1.1, 8.3.3, 9.5.1, 9.6.7, 10.3.3, 11.1.1, 11.3.5, 11.3.7, 14.1.3, 14.2.4, 15.1.6
Claims Subject to Arbitration
15.3.1, 15.4.1
Cleaning Up
3.15, 6.3
Commencement of the Work, Conditions Relating to
2.2.1, 3.2.2, 3.4.1, 3.7.1, 3.10.1, 3.12.6, 5.2.1, 5.2.3, 6.2.2, 8.1.2, 8.2.2, 8.3.1, 11.1, 11.3.1, 11.3.6, 11.4.1, 15.1.4
Commencement of the Work, Definition of
8.1.2
Communications Facilitating Contract Administration
3.9.1, **4.2.4**
Completion, Conditions Relating to
3.4.1, 3.11, 3.15, 4.2.2, 4.2.9, 8.2, 9.4.2, 9.8, 9.9.1, 9.10, 12.2, 13.7, 14.1.2
COMPLETION, PAYMENTS AND
9
Completion, Substantial
4.2.9, 8.1.1, 8.1.3, 8.2.3, 9.4.2, 9.8, 9.9.1, 9.10.3, 12.2, 13.7
Compliance with Laws
1.6, 3.2.3, 3.6, 3.7, 3.12.10, 3.13, 4.1.1, 9.6.4, 10.2.2, 11.1, 11.3, 13.1, 13.4, 13.5.1, 13.5.2, 13.6, 14.1.1, 14.2.1.3, 15.2.8, 15.4.2, 15.4.3
Concealed or Unknown Conditions
3.7.4, 4.2.8, 8.3.1, 10.3
Conditions of the Contract
1.1.1, 6.1.1, 6.1.4
Consent, Written
3.4.2, 3.7.4, 3.12.8, 3.14.2, 4.1.2, 9.3.2, 9.8.5, 9.9.1, 9.10.2, 9.10.3, 11.3.1, 13.2, 13.4.2, 15.4.4.2
Consolidation or Joinder
15.4.4
CONSTRUCTION BY OWNER OR BY SEPARATE CONTRACTORS
1.1.4, **6**
Construction Change Directive, Definition of
7.3.1
Construction Change Directives
1.1.1, 3.4.2, 3.12.8, 4.2.8, 7.1.1, 7.1.2, 7.1.3, **7.3**, 9.3.1.1
Construction Schedules, Contractor's
3.10, 3.12.1, 3.12.2, 6.1.3, 15.1.5.2
Contingent Assignment of Subcontracts
5.4, 14.2.2.2
Continuing Contract Performance
15.1.3
Contract, Definition of
1.1.2
CONTRACT, TERMINATION OR SUSPENSION OF THE
5.4.1.1, 11.3.9, **14**
Contract Administration
3.1.3, 4, 9.4, 9.5
Contract Award and Execution, Conditions Relating to
3.7.1, 3.10, 5.2, 6.1, 11.1.3, 11.3.6, 11.4.1
Contract Documents, Copies Furnished and Use of
1.5.2, 2.2.5, 5.3
Contract Documents, Definition of
1.1.1
Contract Sum
3.7.4, 3.8, 5.2.3, 7.2, 7.3, 7.4, **9.1**, 9.4.2, 9.5.1.4, 9.6.7, 9.7, 10.3.2, 11.3.1, 14.2.4, 14.3.2, 15.1.4, 15.2.5
Contract Sum, Definition of
9.1
Contract Time
3.7.4, 3.7.5, 3.10.2, 5.2.3, 7.2.1.3, 7.3.1, 7.3.5, 7.4, 8.1.1, 8.2.1, 8.3.1, 9.5.1, 9.7, 10.3.2, 12.1.1, 14.3.2, 15.1.5.1, 15.2.5
Contract Time, Definition of
8.1.1

AIA Document A201™ – 2007. Copyright © 1911, 1915, 1918, 1925, 1937, 1951, 1958, 1961, 1963, 1966, 1970, 1976, 1987, 1997 and 2007 by The American Institute of Architects. **All rights reserved. WARNING: This AIA® Document is protected by U.S. Copyright Law and International Treaties. Unauthorized reproduction or distribution of this AIA® Document, or any portion of it, may result in severe civil and criminal penalties, and will be prosecuted to the maximum extent possible under the law.** This document was produced by AIA software at 08:39:36 on 11/21/2016 under Order No.7150521749_1 which expires on 10/03/2017, and is not for resale.
User Notes: (844049242)

CONTRACTOR
3
Contractor, Definition of
3.1, 6.1.2
Contractor's Construction Schedules
3.10, 3.12.1, 3.12.2, 6.1.3, 15.1.5.2
Contractor's Employees
3.3.2, 3.4.3, 3.8.1, 3.9, 3.18.2, 4.2.3, 4.2.6, 10.2, 10.3, 11.1.1, 11.3.7, 14.1, 14.2.1.1
Contractor's Liability Insurance
11.1
Contractor's Relationship with Separate Contractors and Owner's Forces
3.12.5, 3.14.2, 4.2.4, 6, 11.3.7, 12.1.2, 12.2.4
Contractor's Relationship with Subcontractors
1.2.2, 3.3.2, 3.18.1, 3.18.2, 5, 9.6.2, 9.6.7, 9.10.2, 11.3.1.2, 11.3.7, 11.3.8
Contractor's Relationship with the Architect
1.1.2, 1.5, 3.1.3, 3.2.2, 3.2.3, 3.2.4, 3.3.1, 3.4.2, 3.5, 3.7.4, 3.10, 3.11, 3.12, 3.16, 3.18, 4.1.3, 4.2, 5.2, 6.2.2, 7, 8.3.1, 9.2, 9.3, 9.4, 9.5, 9.7, 9.8, 9.9, 10.2.6, 10.3, 11.3.7, 12, 13.5, 15.1.2, 15.2.1
Contractor's Representations
3.2.1, 3.2.2, 3.5, 3.12.6, 6.2.2, 8.2.1, 9.3.3, 9.8.2
Contractor's Responsibility for Those Performing the Work
3.3.2, 3.18, 5.3, 6.1.3, 6.2, 9.5.1, 10.2.8
Contractor's Review of Contract Documents
3.2
Contractor's Right to Stop the Work
9.7
Contractor's Right to Terminate the Contract
14.1, 15.1.6
Contractor's Submittals
3.10, 3.11, 3.12.4, 4.2.7, 5.2.1, 5.2.3, 9.2, 9.3, 9.8.2, 9.8.3, 9.9.1, 9.10.2, 9.10.3, 11.1.3, 11.4.2
Contractor's Superintendent
3.9, 10.2.6
Contractor's Supervision and Construction Procedures
1.2.2, 3.3, 3.4, 3.12.10, 4.2.2, 4.2.7, 6.1.3, 6.2.4, 7.1.3, 7.3.5, 7.3.7, 8.2, 10, 12, 14, 15.1.3
Contractual Liability Insurance
11.1.1.8, 11.2
Coordination and Correlation
1.2, 3.2.1, 3.3.1, 3.10, 3.12.6, 6.1.3, 6.2.1
Copies Furnished of Drawings and Specifications
1.5, 2.2.5, 3.11
Copyrights
1.5, **3.17**
Correction of Work
2.3, 2.4, 3.7.3, 9.4.2, 9.8.2, 9.8.3, 9.9.1, 12.1.2, **12.2**
Correlation and Intent of the Contract Documents
1.2
Cost, Definition of
7.3.7
Costs
2.4, 3.2.4, 3.7.3, 3.8.2, 3.15.2, 5.4.2, 6.1.1, 6.2.3, 7.3.3.3, 7.3.7, 7.3.8, 7.3.9, 9.10.2, 10.3.2, 10.3.6, 11.3, 12.1.2, 12.2.1, 12.2.4, 13.5, 14
Cutting and Patching
3.14, 6.2.5
Damage to Construction of Owner or Separate Contractors
3.14.2, 6.2.4, 10.2.1.2, 10.2.5, 10.4, 11.1.1, 11.3, 12.2.4
Damage to the Work
3.14.2, 9.9.1, 10.2.1.2, 10.2.5, 10.4, 11.3.1, 12.2.4
Damages, Claims for
3.2.4, 3.18, 6.1.1, 8.3.3, 9.5.1, 9.6.7, 10.3.3, 11.1.1, 11.3.5, 11.3.7, 14.1.3, 14.2.4, 15.1.6
Damages for Delay
6.1.1, 8.3.3, 9.5.1.6, 9.7, 10.3.2
Date of Commencement of the Work, Definition of
8.1.2
Date of Substantial Completion, Definition of
8.1.3
Day, Definition of
8.1.4
Decisions of the Architect
3.7.4, 4.2.6, 4.2.7, 4.2.11, 4.2.12, 4.2.13, 15.2, 6.3, 7.3.7, 7.3.9, 8.1.3, 8.3.1, 9.2, 9.4, 9.5.1, 9.8.4, 9.9.1, 13.5.2, 14.2.2, 14.2.4, 15.1, 15.2
Decisions to Withhold Certification
9.4.1, **9.5**, 9.7, 14.1.1.3
Defective or Nonconforming Work, Acceptance, Rejection and Correction of
2.3, 2.4, 3.5, 4.2.6, 6.2.5, 9.5.1, 9.5.2, 9.6.6, 9.8.2, 9.9.3, 9.10.4, 12.2.1
Definitions
1.1, 2.1.1, 3.1.1, 3.5, 3.12.1, 3.12.2, 3.12.3, 4.1.1, 15.1.1, 5.1, 6.1.2, 7.2.1, 7.3.1, 8.1, 9.1, 9.8.1
Delays and Extensions of Time
3.2, 3.7.4, 5.2.3, 7.2.1, 7.3.1, 7.4, **8.3**, 9.5.1, 9.7, 10.3.2, 10.4, 14.3.2, 15.1.5, 15.2.5
Disputes
6.3, 7.3.9, 15.1, 15.2
Documents and Samples at the Site
3.11
Drawings, Definition of
1.1.5
Drawings and Specifications, Use and Ownership of
3.11
Effective Date of Insurance
8.2.2, 11.1.2
Emergencies
10.4, 14.1.1.2, 15.1.4
Employees, Contractor's
3.3.2, 3.4.3, 3.8.1, 3.9, 3.18.2, 4.2.3, 4.2.6, 10.2, 10.3.3, 11.1.1, 11.3.7, 14.1, 14.2.1.1

AIA Document A201™ – 2007. Copyright © 1911, 1915, 1918, 1925, 1937, 1951, 1958, 1961, 1963, 1966, 1970, 1976, 1987, 1997 and 2007 by The American Institute of Architects. **All rights reserved. WARNING: This AIA® Document is protected by U.S. Copyright Law and International Treaties. Unauthorized reproduction or distribution of this AIA® Document, or any portion of it, may result in severe civil and criminal penalties, and will be prosecuted to the maximum extent possible under the law.** This document was produced by AIA software at 08:39:36 on 11/21/2016 under Order No.7150521749_1 which expires on 10/03/2017, and is not for resale.
User Notes: (844049242)

Equipment, Labor, Materials or
1.1.3, 1.1.6, 3.4, 3.5, 3.8.2, 3.8.3, 3.12, 3.13, 3.15.1, 4.2.6, 4.2.7, 5.2.1, 6.2.1, 7.3.7, 9.3.2, 9.3.3, 9.5.1.3, 9.10.2, 10.2.1, 10.2.4, 14.2.1.1, 14.2.1.2
Execution and Progress of the Work
1.1.3, 1.2.1, 1.2.2, 2.2.3, 2.2.5, 3.1, 3.3.1, 3.4.1, 3.5, 3.7.1, 3.10.1, 3.12, 3.14, 4.2, 6.2.2, 7.1.3, 7.3.5, 8.2, 9.5.1, 9.9.1, 10.2, 10.3, 12.2, 14.2, 14.3.1, 15.1.3
Extensions of Time
3.2.4, 3.7.4, 5.2.3, 7.2.1, 7.3, 7.4, 9.5.1, 9.7, 10.3.2, 10.4, 14.3, 15.1.5, 15.2.5
Failure of Payment
9.5.1.3, **9.7**, 9.10.2, 13.6, 14.1.1.3, 14.2.1.2
Faulty Work
(See Defective or Nonconforming Work)
Final Completion and Final Payment
4.2.1, 4.2.9, 9.8.2, **9.10**, 11.1.2, 11.1.3, 11.3.1, 11.3.5, 12.3, 14.2.4, 14.4.3
Financial Arrangements, Owner's
2.2.1, 13.2.2, 14.1.1.4
Fire and Extended Coverage Insurance
11.3.1.1
GENERAL PROVISIONS
1
Governing Law
13.1
Guarantees (See Warranty)
Hazardous Materials
10.2.4, **10.3**
Identification of Subcontractors and Suppliers
5.2.1
Indemnification
3.17, **3.18**, 9.10.2, 10.3.3, 10.3.5, 10.3.6, 11.3.1.2, 11.3.7
Information and Services Required of the Owner
2.1.2, **2.2**, 3.2.2, 3.12.4, 3.12.10, 6.1.3, 6.1.4, 6.2.5, 9.6.1, 9.6.4, 9.9.2, 9.10.3, 10.3.3, 11.2, 11.4, 13.5.1, 13.5.2, 14.1.1.4, 14.1.4, 15.1.3
Initial Decision
15.2
Initial Decision Maker, Definition of
1.1.8
Initial Decision Maker, Decisions
14.2.2, 14.2.4, 15.2.1, 15.2.2, 15.2.3, 15.2.4, 15.2.5
Initial Decision Maker, Extent of Authority
14.2.2, 14.2.4, 15.1.3, 15.2.1, 15.2.2, 15.2.3, 15.2.4, 15.2.5
Injury or Damage to Person or Property
10.2.8, 10.4
Inspections
3.1.3, 3.3.3, 3.7.1, 4.2.2, 4.2.6, 4.2.9, 9.4.2, 9.8.3, 9.9.2, 9.10.1, 12.2.1, 13.5
Instructions to Bidders
1.1.1
Instructions to the Contractor
3.2.4, 3.3.1, 3.8.1, 5.2.1, 7, 8.2.2, 12, 13.5.2
Instruments of Service, Definition of
1.1.7
Insurance
3.18.1, 6.1.1, 7.3.7, 9.3.2, 9.8.4, 9.9.1, 9.10.2, **11**
Insurance, Boiler and Machinery
11.3.2
Insurance, Contractor's Liability
11.1
Insurance, Effective Date of
8.2.2, 11.1.2
Insurance, Loss of Use
11.3.3
Insurance, Owner's Liability
11.2
Insurance, Property
10.2.5, **11.3**
Insurance, Stored Materials
9.3.2
INSURANCE AND BONDS
11
Insurance Companies, Consent to Partial Occupancy
9.9.1
Intent of the Contract Documents
1.2.1, 4.2.7, 4.2.12, 4.2.13, 7.4
Interest
13.6
Interpretation
1.2.3, **1.4**, 4.1.1, 5.1, 6.1.2, 15.1.1
Interpretations, Written
4.2.11, 4.2.12, 15.1.4
Judgment on Final Award
15.4.2
Labor and Materials, Equipment
1.1.3, 1.1.6, **3.4**, 3.5, 3.8.2, 3.8.3, 3.12, 3.13, 3.15.1, 4.2.6, 4.2.7, 5.2.1, 6.2.1, 7.3.7, 9.3.2, 9.3.3, 9.5.1.3, 9.10.2, 10.2.1, 10.2.4, 14.2.1.1, 14.2.1.2
Labor Disputes
8.3.1
Laws and Regulations
1.5, 3.2.3, 3.6, 3.7, 3.12.10, 3.13, 4.1.1, 9.6.4, 9.9.1, 10.2.2, 11.1.1, 11.3, 13.1, 13.4, 13.5.1, 13.5.2, 13.6, 14, 15.2.8, 15.4
Liens
2.1.2, 9.3.3, 9.10.2, 9.10.4, 15.2.8
Limitations, Statutes of
12.2.5, 13.7, 15.4.1.1
Limitations of Liability
2.3, 3.2.2, 3.5, 3.12.10, 3.17, 3.18.1, 4.2.6, 4.2.7, 4.2.12, 6.2.2, 9.4.2, 9.6.4, 9.6.7, 10.2.5, 10.3.3, 11.1.2, 11.2, 11.3.7, 12.2.5, 13.4.2
Limitations of Time
2.1.2, 2.2, 2.4, 3.2.2, 3.10, 3.11, 3.12.5, 3.15.1, 4.2.7, 5.2, 5.3, 5.4.1, 6.2.4, 7.3, 7.4, 8.2, 9.2, 9.3.1, 9.3.3, 9.4.1, 9.5, 9.6, 9.7, 9.8, 9.9, 9.10, 11.1.3, 11.3.1.5, 11.3.6, 11.3.10, 12.2, 13.5, 13.7, 14, 15
Loss of Use Insurance
11.3.3

AIA Document A201™ – 2007. Copyright © 1911, 1915, 1918, 1925, 1937, 1951, 1958, 1961, 1963, 1966, 1970, 1976, 1987, 1997 and 2007 by The American Institute of Architects. **All rights reserved. WARNING: This AIA® Document is protected by U.S. Copyright Law and International Treaties. Unauthorized reproduction or distribution of this AIA® Document, or any portion of it, may result in severe civil and criminal penalties, and will be prosecuted to the maximum extent possible under the law.** This document was produced by AIA software at 08:39:36 on 11/21/2016 under Order No.7150521749_1 which expires on 10/03/2017, and is not for resale.
User Notes: (844049242)

Material Suppliers
1.5, 3.12.1, 4.2.4, 4.2.6, 5.2.1, 9.3, 9.4.2, 9.6, 9.10.5
Materials, Hazardous
10.2.4, **10.3**
Materials, Labor, Equipment and
1.1.3, 1.1.6, 1.5.1, 3.4.1, 3.5, 3.8.2, 3.8.3, 3.12, 3.13, 3.15.1, 4.2.6, 4.2.7, 5.2.1, 6.2.1, 7.3.7, 9.3.2, 9.3.3, 9.5.1.3, 9.10.2, 10.2.1.2, 10.2.4, 14.2.1.1, 14.2.1.2
Means, Methods, Techniques, Sequences and Procedures of Construction
3.3.1, 3.12.10, 4.2.2, 4.2.7, 9.4.2
Mechanic's Lien
2.1.2, 15.2.8
Mediation
8.3.1, 10.3.5, 10.3.6, 15.2.1, 15.2.5, 15.2.6, **15.3**, 15.4.1
Minor Changes in the Work
1.1.1, 3.12.8, 4.2.8, 7.1, **7.4**
MISCELLANEOUS PROVISIONS
13
Modifications, Definition of
1.1.1
Modifications to the Contract
1.1.1, 1.1.2, 3.11, 4.1.2, 4.2.1, 5.2.3, 7, 8.3.1, 9.7, 10.3.2, 11.3.1
Mutual Responsibility
6.2
Nonconforming Work, Acceptance of
9.6.6, 9.9.3, **12.3**
Nonconforming Work, Rejection and Correction of
2.3, 2.4, 3.5, 4.2.6, 6.2.4, 9.5.1, 9.8.2, 9.9.3, 9.10.4, 12.2.1
Notice
2.2.1, 2.3, 2.4, 3.2.4, 3.3.1, 3.7.2, 3.12.9, 5.2.1, 9.7, 9.10, 10.2.2, 11.1.3, 12.2.2.1, 13.3, 13.5.1, 13.5.2, 14.1, 14.2, 15.2.8, 15.4.1
Notice, Written
2.3, 2.4, 3.3.1, 3.9.2, 3.12.9, 3.12.10, 5.2.1, 9.7, 9.10, 10.2.2, 10.3, 11.1.3, 11.3.6, 12.2.2.1, **13.3**, 14, 15.2.8, 15.4.1
Notice of Claims
3.7.4, 10.2.8, **15.1.2**, 15.4
Notice of Testing and Inspections
13.5.1, 13.5.2
Observations, Contractor's
3.2, 3.7.4
Occupancy
2.2.2, 9.6.6, 9.8, 11.3.1.5
Orders, Written
1.1.1, 2.3, 3.9.2, 7, 8.2.2, 11.3.9, 12.1, 12.2.2.1, 13.5.2, 14.3.1
OWNER
2
Owner, Definition of
2.1.1
Owner, Information and Services Required of the
2.1.2, **2.2**, 3.2.2, 3.12.10, 6.1.3, 6.1.4, 6.2.5, 9.3.2, 9.6.1, 9.6.4, 9.9.2, 9.10.3, 10.3.3, 11.2, 11.3, 13.5.1, 13.5.2, 14.1.1.4, 14.1.4, 15.1.3
Owner's Authority
1.5, 2.1.1, 2.3, 2.4, 3.4.2, 3.8.1, 3.12.10, 3.14.2, 4.1.2, 4.1.3, 4.2.4, 4.2.9, 5.2.1, 5.2.4, 5.4.1, 6.1, 6.3, 7.2.1, 7.3.1, 8.2.2, 8.3.1, 9.3.1, 9.3.2, 9.5.1, 9.6.4, 9.9.1, 9.10.2, 10.3.2, 11.1.3, 11.3.3, 11.3.10, 12.2.2, 12.3, 13.2.2, 14.3, 14.4, 15.2.7
Owner's Financial Capability
2.2.1, 13.2.2, 14.1.1.4
Owner's Liability Insurance
11.2
Owner's Relationship with Subcontractors
1.1.2, 5.2, 5.3, 5.4, 9.6.4, 9.10.2, 14.2.2
Owner's Right to Carry Out the Work
2.4, 14.2.2
Owner's Right to Clean Up
6.3
Owner's Right to Perform Construction and to Award Separate Contracts
6.1
Owner's Right to Stop the Work
2.3
Owner's Right to Suspend the Work
14.3
Owner's Right to Terminate the Contract
14.2
Ownership and Use of Drawings, Specifications and Other Instruments of Service
1.1.1, 1.1.6, 1.1.7, **1.5**, 2.2.5, 3.2.2, 3.11, 3.17, 4.2.12, 5.3
Partial Occupancy or Use
9.6.6, **9.9**, 11.3.1.5
Patching, Cutting and
3.14, 6.2.5
Patents
3.17
Payment, Applications for
4.2.5, 7.3.9, 9.2, **9.3**, 9.4, 9.5, 9.6.3, 9.7, 9.8.5, 9.10.1, 14.2.3, 14.2.4, 14.4.3
Payment, Certificates for
4.2.5, 4.2.9, 9.3.3, **9.4**, 9.5, 9.6.1, 9.6.6, 9.7, 9.10.1, 9.10.3, 13.7, 14.1.1.3, 14.2.4
Payment, Failure of
9.5.1.3, **9.7**, 9.10.2, 13.6, 14.1.1.3, 14.2.1.2
Payment, Final
4.2.1, 4.2.9, 9.8.2, 9.10, 11.1.2, 11.1.3, 11.4.1, 12.3, 13.7, 14.2.4, 14.4.3
Payment Bond, Performance Bond and
7.3.7.4, 9.6.7, 9.10.3, **11.4**
Payments, Progress
9.3, **9.6**, 9.8.5, 9.10.3, 13.6, 14.2.3, 15.1.3
PAYMENTS AND COMPLETION
9

AIA Document A201™ – 2007. Copyright © 1911, 1915, 1918, 1925, 1937, 1951, 1958, 1961, 1963, 1966, 1970, 1976, 1987, 1997 and 2007 by The American Institute of Architects. **All rights reserved. WARNING: This AIA® Document is protected by U.S. Copyright Law and International Treaties. Unauthorized reproduction or distribution of this AIA® Document, or any portion of it, may result in severe civil and criminal penalties, and will be prosecuted to the maximum extent possible under the law.** This document was produced by AIA software at 08:39:36 on 11/21/2016 under Order No.7150521749_1 which expires on 10/03/2017, and is not for resale.
User Notes:

(844049242)

Payments to Subcontractors
5.4.2, 9.5.1.3, 9.6.2, 9.6.3, 9.6.4, 9.6.7, 14.2.1.2
PCB
10.3.1
Performance Bond and Payment Bond
7.3.7.4, 9.6.7, 9.10.3, **11.4**
Permits, Fees, Notices and Compliance with Laws
2.2.2, **3.7**, 3.13, 7.3.7.4, 10.2.2
PERSONS AND PROPERTY, PROTECTION OF
10
Polychlorinated Biphenyl
10.3.1
Product Data, Definition of
3.12.2
Product Data and Samples, Shop Drawings
3.11, **3.12**, 4.2.7
Progress and Completion
4.2.2, **8.2**, 9.8, 9.9.1, 14.1.4, 15.1.3
Progress Payments
9.3, **9.6**, 9.8.5, 9.10.3, 13.6, 14.2.3, 15.1.3
Project, Definition of
1.1.4
Project Representatives
4.2.10
Property Insurance
10.2.5, **11.3**
PROTECTION OF PERSONS AND PROPERTY
10
Regulations and Laws
1.5, 3.2.3, 3.6, 3.7, 3.12.10, 3.13, 4.1.1, 9.6.4, 9.9.1, 10.2.2, 11.1, 11.4, 13.1, 13.4, 13.5.1, 13.5.2, 13.6, 14, 15.2.8, 15.4
Rejection of Work
3.5, 4.2.6, 12.2.1
Releases and Waivers of Liens
9.10.2
Representations
3.2.1, 3.5, 3.12.6, 6.2.2, 8.2.1, 9.3.3, 9.4.2, 9.5.1, 9.8.2, 9.10.1
Representatives
2.1.1, 3.1.1, 3.9, 4.1.1, 4.2.1, 4.2.2, 4.2.10, 5.1.1, 5.1.2, 13.2.1
Responsibility for Those Performing the Work
3.3.2, 3.18, 4.2.3, 5.3, 6.1.3, 6.2, 6.3, 9.5.1, 10
Retainage
9.3.1, 9.6.2, 9.8.5, 9.9.1, 9.10.2, 9.10.3
Review of Contract Documents and Field Conditions by Contractor
3.2, 3.12.7, 6.1.3
Review of Contractor's Submittals by Owner and Architect
3.10.1, 3.10.2, 3.11, 3.12, 4.2, 5.2, 6.1.3, 9.2, 9.8.2
Review of Shop Drawings, Product Data and Samples by Contractor
3.12
Rights and Remedies
1.1.2, 2.3, 2.4, 3.5, 3.7.4, 3.15.2, 4.2.6, 5.3, 5.4, 6.1, 6.3, 7.3.1, 8.3, 9.5.1, 9.7, 10.2.5, 10.3, 12.2.2, 12.2.4, **13.4**, 14, 15.4
Royalties, Patents and Copyrights
3.17
Rules and Notices for Arbitration
15.4.1
Safety of Persons and Property
10.2, 10.4
Safety Precautions and Programs
3.3.1, 4.2.2, 4.2.7, 5.3, **10.1**, 10.2, 10.4
Samples, Definition of
3.12.3
Samples, Shop Drawings, Product Data and
3.11, **3.12**, 4.2.7
Samples at the Site, Documents and
3.11
Schedule of Values
9.2, 9.3.1
Schedules, Construction
3.10, 3.12.1, 3.12.2, 6.1.3, 15.1.5.2
Separate Contracts and Contractors
1.1.4, 3.12.5, 3.14.2, 4.2.4, 4.2.7, 6, 8.3.1, 12.1.2
Shop Drawings, Definition of
3.12.1
Shop Drawings, Product Data and Samples
3.11, **3.12**, 4.2.7
Site, Use of
3.13, 6.1.1, 6.2.1
Site Inspections
3.2.2, 3.3.3, 3.7.1, 3.7.4, 4.2, 9.4.2, 9.10.1, 13.5
Site Visits, Architect's
3.7.4, 4.2.2, 4.2.9, 9.4.2, 9.5.1, 9.9.2, 9.10.1, 13.5
Special Inspections and Testing
4.2.6, 12.2.1, 13.5
Specifications, Definition of
1.1.6
Specifications
1.1.1, **1.1.6**, 1.2.2, 1.5, 3.11, 3.12.10, 3.17, 4.2.14
Statute of Limitations
13.7, 15.4.1.1
Stopping the Work
2.3, 9.7, 10.3, 14.1
Stored Materials
6.2.1, 9.3.2, 10.2.1.2, 10.2.4
Subcontractor, Definition of
5.1.1
SUBCONTRACTORS
5
Subcontractors, Work by
1.2.2, 3.3.2, 3.12.1, 4.2.3, 5.2.3, 5.3, 5.4, 9.3.1.2, 9.6.7
Subcontractual Relations
5.3, 5.4, 9.3.1.2, 9.6, 9.10, 10.2.1, 14.1, 14.2.1

AIA Document A201™ – 2007. Copyright © 1911, 1915, 1918, 1925, 1937, 1951, 1958, 1961, 1963, 1966, 1970, 1976, 1987, 1997 and 2007 by The American Institute of Architects. **All rights reserved. WARNING: This AIA® Document is protected by U.S. Copyright Law and International Treaties. Unauthorized reproduction or distribution of this AIA® Document, or any portion of it, may result in severe civil and criminal penalties, and will be prosecuted to the maximum extent possible under the law.** This document was produced by AIA software at 08:39:36 on 11/21/2016 under Order No.7150521749_1 which expires on 10/03/2017, and is not for resale.
User Notes: (844049242)

Submittals
3.10, 3.11, 3.12, 4.2.7, 5.2.1, 5.2.3, 7.3.7, 9.2, 9.3, 9.8, 9.9.1, 9.10.2, 9.10.3, 11.1.3
Submittal Schedule
3.10.2, 3.12.5, 4.2.7
Subrogation, Waivers of
6.1.1, **11.3.7**
Substantial Completion
4.2.9, 8.1.1, 8.1.3, 8.2.3, 9.4.2, **9.8**, 9.9.1, 9.10.3, 12.2, 13.7
Substantial Completion, Definition of
9.8.1
Substitution of Subcontractors
5.2.3, 5.2.4
Substitution of Architect
4.1.3
Substitutions of Materials
3.4.2, 3.5, 7.3.8
Sub-subcontractor, Definition of
5.1.2
Subsurface Conditions
3.7.4
Successors and Assigns
13.2
Superintendent
3.9, 10.2.6
Supervision and Construction Procedures
1.2.2, **3.3**, 3.4, 3.12.10, 4.2.2, 4.2.7, 6.1.3, 6.2.4, 7.1.3, 7.3.7, 8.2, 8.3.1, 9.4.2, 10, 12, 14, 15.1.3
Surety
5.4.1.2, 9.8.5, 9.10.2, 9.10.3, 14.2.2, 15.2.7
Surety, Consent of
9.10.2, 9.10.3
Surveys
2.2.3
Suspension by the Owner for Convenience
14.3
Suspension of the Work
5.4.2, 14.3
Suspension or Termination of the Contract
5.4.1.1, 14
Taxes
3.6, 3.8.2.1, 7.3.7.4
Termination by the Contractor
14.1, 15.1.6
Termination by the Owner for Cause
5.4.1.1, **14.2,** 15.1.6
Termination by the Owner for Convenience
14.4
Termination of the Architect
4.1.3
Termination of the Contractor
14.2.2
TERMINATION OR SUSPENSION OF THE CONTRACT
14
Tests and Inspections
3.1.3, 3.3.3, 4.2.2, 4.2.6, 4.2.9, 9.4.2, 9.8.3, 9.9.2, 9.10.1, 10.3.2, 11.4.1, 12.2.1, **13.5**
TIME
8
Time, Delays and Extensions of
3.2.4, 3.7.4, 5.2.3, 7.2.1, 7.3.1, 7.4, **8.3**, 9.5.1, 9.7, 10.3.2, 10.4, 14.3.2, 15.1.5, 15.2.5
Time Limits
2.1.2, 2.2, 2.4, 3.2.2, 3.10, 3.11, 3.12.5, 3.15.1, 4.2, 5.2, 5.3, 5.4, 6.2.4, 7.3, 7.4, 8.2, 9.2, 9.3.1, 9.3.3, 9.4.1, 9.5, 9.6, 9.7, 9.8, 9.9, 9.10, 11.1.3, 12.2, 13.5, 13.7, 14, 15.1.2, 15.4
Time Limits on Claims
3.7.4, 10.2.8, **13.7**, 15.1.2
Title to Work
9.3.2, 9.3.3
Transmission of Data in Digital Form
1.6
UNCOVERING AND CORRECTION OF WORK
12
Uncovering of Work
12.1
Unforeseen Conditions, Concealed or Unknown
3.7.4, 8.3.1, 10.3
Unit Prices
7.3.3.2, 7.3.4
Use of Documents
1.1.1, 1.5, 2.2.5, 3.12.6, 5.3
Use of Site
3.13, 6.1.1, 6.2.1
Values, Schedule of
9.2, 9.3.1
Waiver of Claims by the Architect
13.4.2
Waiver of Claims by the Contractor
9.10.5, 13.4.2, 15.1.6
Waiver of Claims by the Owner
9.9.3, 9.10.3, 9.10.4, 12.2.2.1, 13.4.2, 14.2.4, 15.1.6
Waiver of Consequential Damages
14.2.4, 15.1.6
Waiver of Liens
9.10.2, 9.10.4
Waivers of Subrogation
6.1.1, **11.3.7**
Warranty
3.5, 4.2.9, 9.3.3, 9.8.4, 9.9.1, 9.10.4, 12.2.2, 13.7
Weather Delays
15.1.5.2
Work, Definition of
1.1.3
Written Consent
1.5.2, 3.4.2, 3.7.4, 3.12.8, 3.14.2, 4.1.2, 9.3.2, 9.8.5, 9.9.1, 9.10.2, 9.10.3, 11.4.1, 13.2, 13.4.2, 15.4.4.2
Written Interpretations
4.2.11, 4.2.12

AIA Document A201™ – 2007. Copyright © 1911, 1915, 1918, 1925, 1937, 1951, 1958, 1961, 1963, 1966, 1970, 1976, 1987, 1997 and 2007 by The American Institute of Architects. **All rights reserved. WARNING: This AIA® Document is protected by U.S. Copyright Law and International Treaties. Unauthorized reproduction or distribution of this AIA® Document, or any portion of it, may result in severe civil and criminal penalties, and will be prosecuted to the maximum extent possible under the law.** This document was produced by AIA software at 08:39:36 on 11/21/2016 under Order No.7150521749_1 which expires on 10/03/2017, and is not for resale.
User Notes:
(844049242)

Written Notice
2.3, 2.4, 3.3.1, 3.9, 3.12.9, 3.12.10, 5.2.1, 8.2.2, 9.7, 9.10, 10.2.2, 10.3, 11.1.3, 12.2.2, 12.2.4, **13.3**, 14, 15.4.1

Written Orders
1.1.1, 2.3, 3.9, 7, 8.2.2, 12.1, 12.2, 13.5.2, 14.3.1, 15.1.2

AIA Document A201™ – 2007. Copyright © 1911, 1915, 1918, 1925, 1937, 1951, 1958, 1961, 1963, 1966, 1970, 1976, 1987, 1997 and 2007 by The American Institute of Architects. **All rights reserved. WARNING: This AIA® Document is protected by U.S. Copyright Law and International Treaties. Unauthorized reproduction or distribution of this AIA® Document, or any portion of it, may result in severe civil and criminal penalties, and will be prosecuted to the maximum extent possible under the law.** This document was produced by AIA software at 08:39:36 on 11/21/2016 under Order No.7150521749_1 which expires on 10/03/2017, and is not for resale.
User Notes: (844049242)

ARTICLE 1 GENERAL PROVISIONS

§ 1.1 BASIC DEFINITIONS

§ 1.1.1 THE CONTRACT DOCUMENTS

The Contract Documents are enumerated in the Agreement between the Owner and Contractor (hereinafter the Agreement) and consist of the Agreement, Conditions of the Contract (General, Supplementary and other Conditions), Drawings, Specifications, Addenda issued prior to execution of the Contract, other documents listed in the Agreement and Modifications issued after execution of the Contract. A Modification is (1) a written amendment to the Contract signed by both parties, (2) a Change Order, (3) a Construction Change Directive or (4) a written order for a minor change in the Work issued by the Architect and agreed to in writing by the Owner. Unless specifically enumerated in the Agreement, the Contract Documents include the advertisement or invitation to bid, Instructions to Bidders, sample forms, other information furnished by the Owner in anticipation of receiving bids or proposals, the Contractor's bid or proposal, or portions of Addenda relating to bidding requirements.

§ 1.1.2 THE CONTRACT

The Contract Documents form the Contract for Construction. The Contract represents the entire and integrated agreement between the parties hereto and supersedes prior negotiations, representations or agreements, either written or oral. The Contract may be amended or modified only by a Modification. The Contract Documents shall not be construed to create a contractual relationship of any kind (1) between the Contractor and the Architect or the Architect's consultants, (2) between the Owner and a Subcontractor or a Sub-subcontractor, (3) between the Owner and the Architect's consultants or (4) between any persons or entities other than the Owner and the Contractor. The Architect shall, however, be entitled to performance and enforcement of obligations under the Contract intended to facilitate performance of the Architect's duties.

§ 1.1.3 THE WORK

The term "Work" means the construction and services required by the Contract Documents, whether completed or partially completed, and includes all other labor, materials, equipment and services provided or to be provided by the Contractor to fulfill the Contractor's obligations. The Work may constitute the whole or a part of the Project.

§ 1.1.4 THE PROJECT

The Project is the total construction of which the Work performed under the Contract Documents may be the whole or a part and which may include construction by the Owner and by separate contractors.

§ 1.1.5 THE DRAWINGS

The Drawings are the graphic and pictorial portions of the Contract Documents showing the design, location and dimensions of the Work, generally including plans, elevations, sections, details, schedules and diagrams.

§ 1.1.6 THE SPECIFICATIONS

The Specifications are that portion of the Contract Documents consisting of the written requirements for materials, equipment, systems, standards and workmanship for the Work, and performance of related services.

§ 1.1.7 INSTRUMENTS OF SERVICE

Instruments of Service are representations, in any medium of expression now known or later developed, of the tangible and intangible creative work performed by the Architect and the Architect's consultants under their respective professional services agreements. Instruments of Service may include, without limitation, studies, surveys, models, sketches, drawings, specifications, and other similar materials.

§ 1.1.8 INITIAL DECISION MAKER

The Initial Decision Maker is the person identified in the Agreement to render initial decisions on Claims in accordance with Section 15.2 and certify termination of the Agreement under Section 14.2.2.

§ 1.2 CORRELATION AND INTENT OF THE CONTRACT DOCUMENTS

§ 1.2.1 The intent of the Contract Documents is to include all items necessary for the proper execution and completion of the Work by the Contractor. The Contract Documents are complementary, and what is required by one shall be as binding as if required by all; performance by the Contractor shall be required only to the extent consistent with the Contract Documents and reasonably inferable from them as being necessary to produce the indicated results.

AIA Document A201™ – 2007. Copyright © 1911, 1915, 1918, 1925, 1937, 1951, 1958, 1961, 1963, 1966, 1970, 1976, 1987, 1997 and 2007 by The American Institute of Architects. **All rights reserved. WARNING: This AIA® Document is protected by U.S. Copyright Law and International Treaties. Unauthorized reproduction or distribution of this AIA® Document, or any portion of it, may result in severe civil and criminal penalties, and will be prosecuted to the maximum extent possible under the law.** This document was produced by AIA software at 08:39:36 on 11/21/2016 under Order No.7150521749_1 which expires on 10/03/2017, and is not for resale.
User Notes: (844049242)

§ 1.2.2 Organization of the Specifications into divisions, sections and articles, and arrangement of Drawings shall not control the Contractor in dividing the Work among Subcontractors or in establishing the extent of Work to be performed by any trade.

§ 1.2.3 Unless otherwise stated in the Contract Documents, words that have well-known technical or construction industry meanings are used in the Contract Documents in accordance with such recognized meanings.

§ 1.3 CAPITALIZATION

Terms capitalized in these General Conditions include those that are (1) specifically defined, (2) the titles of numbered articles or (3) the titles of other documents published by the American Institute of Architects.

§ 1.4 INTERPRETATION

In the interest of brevity the Contract Documents frequently omit modifying words such as "all" and "any" and articles such as "the" and "an," but the fact that a modifier or an article is absent from one statement and appears in another is not intended to affect the interpretation of either statement.

§ 1.5 OWNERSHIP AND USE OF DRAWINGS, SPECIFICATIONS AND OTHER INSTRUMENTS OF SERVICE

§ 1.5.1 The Architect and the Architect's consultants shall be deemed the authors of their respective Instruments of Service, including the Drawings and Specifications,. The Contractor, Subcontractors, Sub-subcontractors, and material or equipment suppliers shall not own or claim a copyright in the Instruments of Service. Submittal or distribution to meet official regulatory requirements or for other purposes in connection with this Project is not to be construed as publication in derogation of the Architect's or Architect's consultants' reserved rights.

§ 1.5.2 The Contractor, Subcontractors, Sub-subcontractors and material or equipment suppliers are authorized to use and reproduce the Instruments of Service provided to them solely and exclusively for execution of the Work. All copies made under this authorization shall bear the copyright notice, if any, shown on the Instruments of Service. The Contractor, Subcontractors, Sub-subcontractors, and material or equipment suppliers may not use the Instruments of Service on other projects or for additions to this Project outside the scope of the Work without the specific written consent of the Owner, Architect and the Architect's consultants.

§ 1.6 TRANSMISSION OF DATA IN DIGITAL FORM

If the parties intend to transmit Instruments of Service or any other information or documentation in digital form, they shall endeavor to establish necessary protocols governing such transmissions, unless otherwise already provided in the Agreement or the Contract Documents.

ARTICLE 2 OWNER

§ 2.1 GENERAL

§ 2.1.1 The Owner is the person or entity identified as such in the Agreement and is referred to throughout the Contract Documents as if singular in number. The Owner shall designate in writing a representative who shall have express authority to bind the Owner with respect to all matters requiring the Owner's approval or authorization. Except as otherwise provided in Section 4.2.1, the Architect does not have such authority. The term "Owner" means the Owner or the Owner's authorized representative.

§ 2.1.2 The Owner shall furnish to the Contractor within thirty days after receipt of a written request, information necessary and relevant for the Contractor to evaluate, give notice of or enforce mechanic's lien rights. Such information shall include a correct statement of the record legal title to the property on which the Project is located, usually referred to as the site, and the Owner's interest therein.

§ 2.2 INFORMATION AND SERVICES REQUIRED OF THE OWNER

§ 2.2.1 Prior to commencement of the Work, the Contractor may request in writing that the Owner provide reasonable evidence that the Owner has made financial arrangements to fulfill the Owner's obligations under the Contract. Thereafter, the Contractor may only request such evidence if (1) the Owner fails to make payments to the Contractor as the Contract Documents require; (2) a change in the Work materially changes the Contract Sum; or (3) the Contractor identifies in writing a reasonable concern regarding the Owner's ability to make payment when due. The Owner shall furnish such evidence as a condition precedent to commencement or continuation of the Work or the portion of the Work affected by a material change. After the Owner furnishes the evidence, the Owner shall not materially vary such financial arrangements without prior notice to the Contractor.

Init.
/
AIA Document A201™ – 2007. Copyright © 1911, 1915, 1918, 1925, 1937, 1951, 1958, 1961, 1963, 1966, 1970, 1976, 1987, 1997 and 2007 by The American Institute of Architects. **All rights reserved. WARNING: This AIA® Document is protected by U.S. Copyright Law and International Treaties. Unauthorized reproduction or distribution of this AIA® Document, or any portion of it, may result in severe civil and criminal penalties, and will be prosecuted to the maximum extent possible under the law.** This document was produced by AIA software at 08:39:36 on 11/21/2016 under Order No.7150521749_1 which expires on 10/03/2017, and is not for resale.
User Notes: (844049242)

§ 2.2.2 Except for permits and fees that are the responsibility of the Contractor under the Contract Documents, including those required under Section 3.7.1, the Owner shall secure and pay for necessary approvals, easements, assessments and charges required for construction, use or occupancy of permanent structures or for permanent changes in existing facilities.

§ 2.2.3 The Owner shall furnish surveys describing physical characteristics, legal limitations and utility locations for the site of the Project, and a legal description of the site. The Contractor shall be entitled to rely on the accuracy of information furnished by the Owner but shall exercise proper precautions relating to the safe performance of the Work.

§ 2.2.4 The Owner shall furnish information or services required of the Owner by the Contract Documents with reasonable promptness. The Owner shall also furnish any other information or services under the Owner's control and relevant to the Contractor's performance of the Work with reasonable promptness after receiving the Contractor's written request for such information or services.

§ 2.2.5 Unless otherwise provided in the Contract Documents, the Owner shall furnish to the Contractor one copy of the Contract Documents for purposes of making reproductions pursuant to Section 1.5.2.

§ 2.3 OWNER'S RIGHT TO STOP THE WORK

If the Contractor fails to correct Work that is not in accordance with the requirements of the Contract Documents as required by Section 12.2 or repeatedly fails to carry out Work in accordance with the Contract Documents, the Owner may issue a written order to the Contractor to stop the Work, or any portion thereof, until the cause for such order has been eliminated; however, the right of the Owner to stop the Work shall not give rise to a duty on the part of the Owner to exercise this right for the benefit of the Contractor or any other person or entity, except to the extent required by Section 6.1.3.

§ 2.4 OWNER'S RIGHT TO CARRY OUT THE WORK

If the Contractor defaults or neglects to carry out the Work in accordance with the Contract Documents and fails within a ten-day period after receipt of written notice from the Owner to commence and continue correction of such default or neglect with diligence and promptness, the Owner may, without prejudice to other remedies the Owner may have, correct such deficiencies. In such case an appropriate Change Order shall be issued deducting from payments then or thereafter due the Contractor the reasonable cost of correcting such deficiencies, including Owner's expenses and compensation for the Architect's additional services made necessary by such default, neglect or failure. If payments then or thereafter due the Contractor are not sufficient to cover such amounts, the Contractor shall promptly pay the difference to the Owner.

ARTICLE 3 CONTRACTOR

§ 3.1 GENERAL

§ 3.1.1 The Contractor is the person or entity identified as such in the Agreement and is referred to throughout the Contract Documents as if singular in number. The Contractor shall be lawfully licensed, if required in the jurisdiction where the Project is located. The Contractor shall designate in writing a representative who shall have express authority to bind the Contractor with respect to all matters under this Contract. The term "Contractor" means the Contractor or the Contractor's authorized representative.

§ 3.1.2 The Contractor shall perform the Work in accordance with the Contract Documents.

§ 3.1.3 The Contractor shall not be relieved of obligations to perform the Work in accordance with the Contract Documents either by activities or duties of the Architect in the Architect's administration of the Contract, or by tests, inspections or approvals required or performed by persons or entities other than the Contractor.

§ 3.2 REVIEW OF CONTRACT DOCUMENTS AND FIELD CONDITIONS BY CONTRACTOR

§ 3.2.1 Execution of the Contract by the Contractor is a representation that the Contractor has visited the site, become generally familiar with local conditions under which the Work is to be performed and correlated personal observations with requirements of the Contract Documents.

AIA Document A201™ – 2007. Copyright © 1911, 1915, 1918, 1925, 1937, 1951, 1958, 1961, 1963, 1966, 1970, 1976, 1987, 1997 and 2007 by The American Institute of Architects. **All rights reserved. WARNING: This AIA® Document is protected by U.S. Copyright Law and International Treaties. Unauthorized reproduction or distribution of this AIA® Document, or any portion of it, may result in severe civil and criminal penalties, and will be prosecuted to the maximum extent possible under the law.** This document was produced by AIA software at 08:39:36 on 11/21/2016 under Order No.7150521749_1 which expires on 10/03/2017, and is not for resale.
User Notes: (844049242)

§ 3.2.2 Because the Contract Documents are complementary, the Contractor shall, before starting each portion of the Work, carefully study and compare the various Contract Documents relative to that portion of the Work, as well as the information furnished by the Owner pursuant to Section 2.2.3, shall take field measurements of any existing conditions related to that portion of the Work, and shall observe any conditions at the site affecting it. These obligations are for the purpose of facilitating coordination and construction by the Contractor and are not for the purpose of discovering errors, omissions, or inconsistencies in the Contract Documents; however, the Contractor shall promptly report to the Architect any errors, inconsistencies or omissions discovered by or made known to the Contractor as a request for information in such form as the Architect may require. It is recognized that the Contractor's review is made in the Contractor's capacity as a contractor and not as a licensed design professional, unless otherwise specifically provided in the Contract Documents.

§ 3.2.3 The Contractor is not required to ascertain that the Contract Documents are in accordance with applicable laws, statutes, ordinances, codes, rules and regulations, or lawful orders of public authorities, but the Contractor shall promptly report to the Architect any nonconformity discovered by or made known to the Contractor as a request for information in such form as the Architect may require.

§ 3.2.4 If the Contractor believes that additional cost or time is involved because of clarifications or instructions the Architect issues in response to the Contractor's notices or requests for information pursuant to Sections 3.2.2 or 3.2.3, the Contractor shall make Claims as provided in Article 15. If the Contractor fails to perform the obligations of Sections 3.2.2 or 3.2.3, the Contractor shall pay such costs and damages to the Owner as would have been avoided if the Contractor had performed such obligations. If the Contractor performs those obligations, the Contractor shall not be liable to the Owner or Architect for damages resulting from errors, inconsistencies or omissions in the Contract Documents, for differences between field measurements or conditions and the Contract Documents, or for nonconformities of the Contract Documents to applicable laws, statutes, ordinances, codes, rules and regulations, and lawful orders of public authorities.

§ 3.3 SUPERVISION AND CONSTRUCTION PROCEDURES

§ 3.3.1 The Contractor shall supervise and direct the Work, using the Contractor's best skill and attention. The Contractor shall be solely responsible for, and have control over, construction means, methods, techniques, sequences and procedures and for coordinating all portions of the Work under the Contract, unless the Contract Documents give other specific instructions concerning these matters. If the Contract Documents give specific instructions concerning construction means, methods, techniques, sequences or procedures, the Contractor shall evaluate the jobsite safety thereof and, except as stated below, shall be fully and solely responsible for the jobsite safety of such means, methods, techniques, sequences or procedures. If the Contractor determines that such means, methods, techniques, sequences or procedures may not be safe, the Contractor shall give timely written notice to the Owner and Architect and shall not proceed with that portion of the Work without further written instructions from the Architect.

§ 3.3.2 The Contractor shall be responsible to the Owner for acts and omissions of the Contractor's employees, Subcontractors and their agents and employees, and other persons or entities performing portions of the Work for, or on behalf of, the Contractor or any of its Subcontractors.

§ 3.3.3 The Contractor shall be responsible for inspection of portions of Work already performed to determine that such portions are in proper condition to receive subsequent Work.

§ 3.4 LABOR AND MATERIALS

§ 3.4.1 Unless otherwise provided in the Contract Documents, the Contractor shall provide and pay for labor, materials, equipment, tools, construction equipment and machinery, water, heat, utilities, transportation, and other facilities and services necessary for proper execution and completion of the Work, whether temporary or permanent and whether or not incorporated or to be incorporated in the Work.

§ 3.4.2 Except in the case of minor changes in the Work authorized by the Architect in accordance with Sections 3.12.8 or 7.4, the Contractor may make substitutions only with the consent of the Owner, after evaluation by the Architect and in accordance with a Change Order or Construction Change Directive.

AIA Document A201™ – 2007. Copyright © 1911, 1915, 1918, 1925, 1937, 1951, 1958, 1961, 1963, 1966, 1970, 1976, 1987, 1997 and 2007 by The American Institute of Architects. **All rights reserved. WARNING: This AIA® Document is protected by U.S. Copyright Law and International Treaties. Unauthorized reproduction or distribution of this AIA® Document, or any portion of it, may result in severe civil and criminal penalties, and will be prosecuted to the maximum extent possible under the law.** This document was produced by AIA software at 08:39:36 on 11/21/2016 under Order No.7150521749_1 which expires on 10/03/2017, and is not for resale.
User Notes:

§ 3.4.3 The Contractor shall enforce strict discipline and good order among the Contractor's employees and other persons carrying out the Work. The Contractor shall not permit employment of unfit persons or persons not properly skilled in tasks assigned to them.

§ 3.5 WARRANTY

The Contractor warrants to the Owner and Architect that materials and equipment furnished under the Contract will be of good quality and new unless the Contract Documents require or permit otherwise. The Contractor further warrants that the Work will conform to the requirements of the Contract Documents and will be free from defects, except for those inherent in the quality of the Work the Contract Documents require or permit. Work, materials, or equipment not conforming to these requirements may be considered defective. The Contractor's warranty excludes remedy for damage or defect caused by abuse, alterations to the Work not executed by the Contractor, improper or insufficient maintenance, improper operation, or normal wear and tear and normal usage. If required by the Architect, the Contractor shall furnish satisfactory evidence as to the kind and quality of materials and equipment.

§ 3.6 TAXES

The Contractor shall pay sales, consumer, use and similar taxes for the Work provided by the Contractor that are legally enacted when bids are received or negotiations concluded, whether or not yet effective or merely scheduled to go into effect.

§ 3.7 PERMITS, FEES, NOTICES AND COMPLIANCE WITH LAWS

§ 3.7.1 Unless otherwise provided in the Contract Documents, the Contractor shall secure and pay for the building permit as well as for other permits, fees, licenses, and inspections by government agencies necessary for proper execution and completion of the Work that are customarily secured after execution of the Contract and legally required at the time bids are received or negotiations concluded.

§ 3.7.2 The Contractor shall comply with and give notices required by applicable laws, statutes, ordinances, codes, rules and regulations, and lawful orders of public authorities applicable to performance of the Work.

§ 3.7.3 If the Contractor performs Work knowing it to be contrary to applicable laws, statutes, ordinances, codes, rules and regulations, or lawful orders of public authorities, the Contractor shall assume appropriate responsibility for such Work and shall bear the costs attributable to correction.

§ 3.7.4 Concealed or Unknown Conditions. If the Contractor encounters conditions at the site that are (1) subsurface or otherwise concealed physical conditions that differ materially from those indicated in the Contract Documents or (2) unknown physical conditions of an unusual nature, that differ materially from those ordinarily found to exist and generally recognized as inherent in construction activities of the character provided for in the Contract Documents, the Contractor shall promptly provide notice to the Owner and the Architect before conditions are disturbed and in no event later than 21 days after first observance of the conditions. The Architect will promptly investigate such conditions and, if the Architect determines that they differ materially and cause an increase or decrease in the Contractor's cost of, or time required for, performance of any part of the Work, will recommend an equitable adjustment in the Contract Sum or Contract Time, or both. If the Architect determines that the conditions at the site are not materially different from those indicated in the Contract Documents and that no change in the terms of the Contract is justified, the Architect shall promptly notify the Owner and Contractor in writing, stating the reasons. If either party disputes the Architect's determination or recommendation, that party may proceed as provided in Article 15.

§ 3.7.5 If, in the course of the Work, the Contractor encounters human remains or recognizes the existence of burial markers, archaeological sites or wetlands not indicated in the Contract Documents, the Contractor shall immediately suspend any operations that would affect them and shall notify the Owner and Architect. Upon receipt of such notice, the Owner shall promptly take any action necessary to obtain governmental authorization required to resume the operations. The Contractor shall continue to suspend such operations until otherwise instructed by the Owner but shall continue with all other operations that do not affect those remains or features. Requests for adjustments in the Contract Sum and Contract Time arising from the existence of such remains or features may be made as provided in Article 15.

§ 3.8 ALLOWANCES

§ 3.8.1 The Contractor shall include in the Contract Sum all allowances stated in the Contract Documents. Items covered by allowances shall be supplied for such amounts and by such persons or entities as the Owner may direct,

AIA Document A201™ – 2007. Copyright © 1911, 1915, 1918, 1925, 1937, 1951, 1958, 1961, 1963, 1966, 1970, 1976, 1987, 1997 and 2007 by The American Institute of Architects. **All rights reserved. WARNING: This AIA® Document is protected by U.S. Copyright Law and International Treaties. Unauthorized reproduction or distribution of this AIA® Document, or any portion of it, may result in severe civil and criminal penalties, and will be prosecuted to the maximum extent possible under the law.** This document was produced by AIA software at 08:39:36 on 11/21/2016 under Order No.7150521749_1 which expires on 10/03/2017, and is not for resale.
User Notes:

but the Contractor shall not be required to employ persons or entities to whom the Contractor has reasonable objection.

§ 3.8.2 Unless otherwise provided in the Contract Documents,

- **.1** Allowances shall cover the cost to the Contractor of materials and equipment delivered at the site and all required taxes, less applicable trade discounts;
- **.2** Contractor's costs for unloading and handling at the site, labor, installation costs, overhead, profit and other expenses contemplated for stated allowance amounts shall be included in the Contract Sum but not in the allowances; and
- **.3** Whenever costs are more than or less than allowances, the Contract Sum shall be adjusted accordingly by Change Order. The amount of the Change Order shall reflect (1) the difference between actual costs and the allowances under Section 3.8.2.1 and (2) changes in Contractor's costs under Section 3.8.2.2.

§ 3.8.3 Materials and equipment under an allowance shall be selected by the Owner with reasonable promptness.

§ 3.9 SUPERINTENDENT

§ 3.9.1 The Contractor shall employ a competent superintendent and necessary assistants who shall be in attendance at the Project site during performance of the Work. The superintendent shall represent the Contractor, and communications given to the superintendent shall be as binding as if given to the Contractor.

§ 3.9.2 The Contractor, as soon as practicable after award of the Contract, shall furnish in writing to the Owner through the Architect the name and qualifications of a proposed superintendent. The Architect may reply within 14 days to the Contractor in writing stating (1) whether the Owner or the Architect has reasonable objection to the proposed superintendent or (2) that the Architect requires additional time to review. Failure of the Architect to reply within the 14 day period shall constitute notice of no reasonable objection.

§ 3.9.3 The Contractor shall not employ a proposed superintendent to whom the Owner or Architect has made reasonable and timely objection. The Contractor shall not change the superintendent without the Owner's consent, which shall not unreasonably be withheld or delayed.

§ 3.10 CONTRACTOR'S CONSTRUCTION SCHEDULES

§ 3.10.1 The Contractor, promptly after being awarded the Contract, shall prepare and submit for the Owner's and Architect's information a Contractor's construction schedule for the Work. The schedule shall not exceed time limits current under the Contract Documents, shall be revised at appropriate intervals as required by the conditions of the Work and Project, shall be related to the entire Project to the extent required by the Contract Documents, and shall provide for expeditious and practicable execution of the Work.

§ 3.10.2 The Contractor shall prepare a submittal schedule, promptly after being awarded the Contract and thereafter as necessary to maintain a current submittal schedule, and shall submit the schedule(s) for the Architect's approval. The Architect's approval shall not unreasonably be delayed or withheld. The submittal schedule shall (1) be coordinated with the Contractor's construction schedule, and (2) allow the Architect reasonable time to review submittals. If the Contractor fails to submit a submittal schedule, the Contractor shall not be entitled to any increase in Contract Sum or extension of Contract Time based on the time required for review of submittals.

§ 3.10.3 The Contractor shall perform the Work in general accordance with the most recent schedules submitted to the Owner and Architect.

§ 3.11 DOCUMENTS AND SAMPLES AT THE SITE

The Contractor shall maintain at the site for the Owner one copy of the Drawings, Specifications, Addenda, Change Orders and other Modifications, in good order and marked currently to indicate field changes and selections made during construction, and one copy of approved Shop Drawings, Product Data, Samples and similar required submittals. These shall be available to the Architect and shall be delivered to the Architect for submittal to the Owner upon completion of the Work as a record of the Work as constructed.

AIA Document A201™ – 2007. Copyright © 1911, 1915, 1918, 1925, 1937, 1951, 1958, 1961, 1963, 1966, 1970, 1976, 1987, 1997 and 2007 by The American Institute of Architects. **All rights reserved. WARNING: This AIA® Document is protected by U.S. Copyright Law and International Treaties. Unauthorized reproduction or distribution of this AIA® Document, or any portion of it, may result in severe civil and criminal penalties, and will be prosecuted to the maximum extent possible under the law.** This document was produced by AIA software at 08:39:36 on 11/21/2016 under Order No.7150521749_1 which expires on 10/03/2017, and is not for resale.
User Notes: (844049242)

§ 3.12 SHOP DRAWINGS, PRODUCT DATA AND SAMPLES

§ 3.12.1 Shop Drawings are drawings, diagrams, schedules and other data specially prepared for the Work by the Contractor or a Subcontractor, Sub-subcontractor, manufacturer, supplier or distributor to illustrate some portion of the Work.

§ 3.12.2 Product Data are illustrations, standard schedules, performance charts, instructions, brochures, diagrams and other information furnished by the Contractor to illustrate materials or equipment for some portion of the Work.

§ 3.12.3 Samples are physical examples that illustrate materials, equipment or workmanship and establish standards by which the Work will be judged.

§ 3.12.4 Shop Drawings, Product Data, Samples and similar submittals are not Contract Documents. Their purpose is to demonstrate the way by which the Contractor proposes to conform to the information given and the design concept expressed in the Contract Documents for those portions of the Work for which the Contract Documents require submittals. Review by the Architect is subject to the limitations of Section 4.2.7. Informational submittals upon which the Architect is not expected to take responsive action may be so identified in the Contract Documents. Submittals that are not required by the Contract Documents may be returned by the Architect without action.

§ 3.12.5 The Contractor shall review for compliance with the Contract Documents, approve and submit to the Architect Shop Drawings, Product Data, Samples and similar submittals required by the Contract Documents in accordance with the submittal schedule approved by the Architect or, in the absence of an approved submittal schedule, with reasonable promptness and in such sequence as to cause no delay in the Work or in the activities of the Owner or of separate contractors.

§ 3.12.6 By submitting Shop Drawings, Product Data, Samples and similar submittals, the Contractor represents to the Owner and Architect that the Contractor has (1) reviewed and approved them, (2) determined and verified materials, field measurements and field construction criteria related thereto, or will do so and (3) checked and coordinated the information contained within such submittals with the requirements of the Work and of the Contract Documents.

§ 3.12.7 The Contractor shall perform no portion of the Work for which the Contract Documents require submittal and review of Shop Drawings, Product Data, Samples or similar submittals until the respective submittal has been approved by the Architect.

§ 3.12.8 The Work shall be in accordance with approved submittals except that the Contractor shall not be relieved of responsibility for deviations from requirements of the Contract Documents by the Architect's approval of Shop Drawings, Product Data, Samples or similar submittals unless the Contractor has specifically informed the Architect in writing of such deviation at the time of submittal and (1) the Architect has given written approval to the specific deviation as a minor change in the Work, or (2) a Change Order or Construction Change Directive has been issued authorizing the deviation. The Contractor shall not be relieved of responsibility for errors or omissions in Shop Drawings, Product Data, Samples or similar submittals by the Architect's approval thereof.

§ 3.12.9 The Contractor shall direct specific attention, in writing or on resubmitted Shop Drawings, Product Data, Samples or similar submittals, to revisions other than those requested by the Architect on previous submittals. In the absence of such written notice, the Architect's approval of a resubmission shall not apply to such revisions.

§ 3.12.10 The Contractor shall not be required to provide professional services that constitute the practice of architecture or engineering unless such services are specifically required by the Contract Documents for a portion of the Work or unless the Contractor needs to provide such services in order to carry out the Contractor's responsibilities for construction means, methods, techniques, sequences and procedures. The Contractor shall not be required to provide professional services in violation of applicable law. If professional design services or certifications by a design professional related to systems, materials or equipment are specifically required of the Contractor by the Contract Documents, the Owner and the Architect will specify all performance and design criteria that such services must satisfy. The Contractor shall cause such services or certifications to be provided by a properly licensed design professional, whose signature and seal shall appear on all drawings, calculations, specifications, certifications, Shop Drawings and other submittals prepared by such professional. Shop Drawings and other submittals related to the Work designed or certified by such professional, if prepared by others, shall bear

AIA Document A201™ – 2007. Copyright © 1911, 1915, 1918, 1925, 1937, 1951, 1958, 1961, 1963, 1966, 1970, 1976, 1987, 1997 and 2007 by The American Institute of Architects. **All rights reserved.** **WARNING: This AIA® Document is protected by U.S. Copyright Law and International Treaties. Unauthorized reproduction or distribution of this AIA® Document, or any portion of it, may result in severe civil and criminal penalties, and will be prosecuted to the maximum extent possible under the law.** This document was produced by AIA software at 08:39:36 on 11/21/2016 under Order No.7150521749_1 which expires on 10/03/2017, and is not for resale.
User Notes:

(844049242)

such professional's written approval when submitted to the Architect. The Owner and the Architect shall be entitled to rely upon the adequacy, accuracy and completeness of the services, certifications and approvals performed or provided by such design professionals, provided the Owner and Architect have specified to the Contractor all performance and design criteria that such services must satisfy. Pursuant to this Section 3.12.10, the Architect will review, approve or take other appropriate action on submittals only for the limited purpose of checking for conformance with information given and the design concept expressed in the Contract Documents. The Contractor shall not be responsible for the adequacy of the performance and design criteria specified in the Contract Documents.

§ 3.13 USE OF SITE

The Contractor shall confine operations at the site to areas permitted by applicable laws, statutes, ordinances, codes, rules and regulations, and lawful orders of public authorities and the Contract Documents and shall not unreasonably encumber the site with materials or equipment.

§ 3.14 CUTTING AND PATCHING

§ 3.14.1 The Contractor shall be responsible for cutting, fitting or patching required to complete the Work or to make its parts fit together properly. All areas requiring cutting, fitting and patching shall be restored to the condition existing prior to the cutting, fitting and patching, unless otherwise required by the Contract Documents.

§ 3.14.2 The Contractor shall not damage or endanger a portion of the Work or fully or partially completed construction of the Owner or separate contractors by cutting, patching or otherwise altering such construction, or by excavation. The Contractor shall not cut or otherwise alter such construction by the Owner or a separate contractor except with written consent of the Owner and of such separate contractor; such consent shall not be unreasonably withheld. The Contractor shall not unreasonably withhold from the Owner or a separate contractor the Contractor's consent to cutting or otherwise altering the Work.

§ 3.15 CLEANING UP

§ 3.15.1 The Contractor shall keep the premises and surrounding area free from accumulation of waste materials or rubbish caused by operations under the Contract. At completion of the Work, the Contractor shall remove waste materials, rubbish, the Contractor's tools, construction equipment, machinery and surplus materials from and about the Project.

§ 3.15.2 If the Contractor fails to clean up as provided in the Contract Documents, the Owner may do so and Owner shall be entitled to reimbursement from the Contractor.

§ 3.16 ACCESS TO WORK

The Contractor shall provide the Owner and Architect access to the Work in preparation and progress wherever located.

§ 3.17 ROYALTIES, PATENTS AND COPYRIGHTS

The Contractor shall pay all royalties and license fees. The Contractor shall defend suits or claims for infringement of copyrights and patent rights and shall hold the Owner and Architect harmless from loss on account thereof, but shall not be responsible for such defense or loss when a particular design, process or product of a particular manufacturer or manufacturers is required by the Contract Documents, or where the copyright violations are contained in Drawings, Specifications or other documents prepared by the Owner or Architect. However, if the Contractor has reason to believe that the required design, process or product is an infringement of a copyright or a patent, the Contractor shall be responsible for such loss unless such information is promptly furnished to the Architect.

§ 3.18 INDEMNIFICATION

§ 3.18.1 To the fullest extent permitted by law the Contractor shall indemnify and hold harmless the Owner, Architect, Architect's consultants, and agents and employees of any of them from and against claims, damages, losses and expenses, including but not limited to attorneys' fees, arising out of or resulting from performance of the Work, provided that such claim, damage, loss or expense is attributable to bodily injury, sickness, disease or death, or to injury to or destruction of tangible property (other than the Work itself), but only to the extent caused by the negligent acts or omissions of the Contractor, a Subcontractor, anyone directly or indirectly employed by them or anyone for whose acts they may be liable, regardless of whether or not such claim, damage, loss or expense is

AIA Document A201™ – 2007. Copyright © 1911, 1915, 1918, 1925, 1937, 1951, 1958, 1961, 1963, 1966, 1970, 1976, 1987, 1997 and 2007 by The American Institute of Architects. **All rights reserved. WARNING: This AIA® Document is protected by U.S. Copyright Law and International Treaties. Unauthorized reproduction or distribution of this AIA® Document, or any portion of it, may result in severe civil and criminal penalties, and will be prosecuted to the maximum extent possible under the law.** This document was produced by AIA software at 08:39:36 on 11/21/2016 under Order No.7150521749_1 which expires on 10/03/2017, and is not for resale.
User Notes:

caused in part by a party indemnified hereunder. Such obligation shall not be construed to negate, abridge, or reduce other rights or obligations of indemnity that would otherwise exist as to a party or person described in this Section 3.18.

§ 3.18.2 In claims against any person or entity indemnified under this Section 3.18 by an employee of the Contractor, a Subcontractor, anyone directly or indirectly employed by them or anyone for whose acts they may be liable, the indemnification obligation under Section 3.18.1 shall not be limited by a limitation on amount or type of damages, compensation or benefits payable by or for the Contractor or a Subcontractor under workers' compensation acts, disability benefit acts or other employee benefit acts.

ARTICLE 4 ARCHITECT

§ 4.1 GENERAL

§ 4.1.1 The Owner shall retain an architect lawfully licensed to practice architecture or an entity lawfully practicing architecture in the jurisdiction where the Project is located. That person or entity is identified as the Architect in the Agreement and is referred to throughout the Contract Documents as if singular in number.

§ 4.1.2 Duties, responsibilities and limitations of authority of the Architect as set forth in the Contract Documents shall not be restricted, modified or extended without written consent of the Owner, Contractor and Architect. Consent shall not be unreasonably withheld.

§ 4.1.3 If the employment of the Architect is terminated, the Owner shall employ a successor architect as to whom the Contractor has no reasonable objection and whose status under the Contract Documents shall be that of the Architect.

§ 4.2 ADMINISTRATION OF THE CONTRACT

§ 4.2.1 The Architect will provide administration of the Contract as described in the Contract Documents and will be an Owner's representative during construction until the date the Architect issues the final Certificate for Payment. The Architect will have authority to act on behalf of the Owner only to the extent provided in the Contract Documents.

§ 4.2.2 The Architect will visit the site at intervals appropriate to the stage of construction, or as otherwise agreed with the Owner, to become generally familiar with the progress and quality of the portion of the Work completed, and to determine in general if the Work observed is being performed in a manner indicating that the Work, when fully completed, will be in accordance with the Contract Documents. However, the Architect will not be required to make exhaustive or continuous on-site inspections to check the quality or quantity of the Work. The Architect will not have control over, charge of, or responsibility for, the construction means, methods, techniques, sequences or procedures, or for the safety precautions and programs in connection with the Work, since these are solely the Contractor's rights and responsibilities under the Contract Documents, except as provided in Section 3.3.1.

§ 4.2.3 On the basis of the site visits, the Architect will keep the Owner reasonably informed about the progress and quality of the portion of the Work completed, and report to the Owner (1) known deviations from the Contract Documents and from the most recent construction schedule submitted by the Contractor, and (2) defects and deficiencies observed in the Work. The Architect will not be responsible for the Contractor's failure to perform the Work in accordance with the requirements of the Contract Documents. The Architect will not have control over or charge of and will not be responsible for acts or omissions of the Contractor, Subcontractors, or their agents or employees, or any other persons or entities performing portions of the Work.

§ 4.2.4 COMMUNICATIONS FACILITATING CONTRACT ADMINISTRATION

Except as otherwise provided in the Contract Documents or when direct communications have been specially authorized, the Owner and Contractor shall endeavor to communicate with each other through the Architect about matters arising out of or relating to the Contract. Communications by and with the Architect's consultants shall be through the Architect. Communications by and with Subcontractors and material suppliers shall be through the Contractor. Communications by and with separate contractors shall be through the Owner.

§ 4.2.5 Based on the Architect's evaluations of the Contractor's Applications for Payment, the Architect will review and certify the amounts due the Contractor and will issue Certificates for Payment in such amounts.

AIA Document A201™ – 2007. Copyright © 1911, 1915, 1918, 1925, 1937, 1951, 1958, 1961, 1963, 1966, 1970, 1976, 1987, 1997 and 2007 by The American Institute of Architects. **All rights reserved. WARNING: This AIA® Document is protected by U.S. Copyright Law and International Treaties. Unauthorized reproduction or distribution of this AIA® Document, or any portion of it, may result in severe civil and criminal penalties, and will be prosecuted to the maximum extent possible under the law.** This document was produced by AIA software at 08:39:36 on 11/21/2016 under Order No.7150521749_1 which expires on 10/03/2017, and is not for resale.
User Notes: (844049242)

§ 4.2.6 The Architect has authority to reject Work that does not conform to the Contract Documents. Whenever the Architect considers it necessary or advisable, the Architect will have authority to require inspection or testing of the Work in accordance with Sections 13.5.2 and 13.5.3, whether or not such Work is fabricated, installed or completed. However, neither this authority of the Architect nor a decision made in good faith either to exercise or not to exercise such authority shall give rise to a duty or responsibility of the Architect to the Contractor, Subcontractors, material and equipment suppliers, their agents or employees, or other persons or entities performing portions of the Work.

§ 4.2.7 The Architect will review and approve, or take other appropriate action upon, the Contractor's submittals such as Shop Drawings, Product Data and Samples, but only for the limited purpose of checking for conformance with information given and the design concept expressed in the Contract Documents. The Architect's action will be taken in accordance with the submittal schedule approved by the Architect or, in the absence of an approved submittal schedule, with reasonable promptness while allowing sufficient time in the Architect's professional judgment to permit adequate review. Review of such submittals is not conducted for the purpose of determining the accuracy and completeness of other details such as dimensions and quantities, or for substantiating instructions for installation or performance of equipment or systems, all of which remain the responsibility of the Contractor as required by the Contract Documents. The Architect's review of the Contractor's submittals shall not relieve the Contractor of the obligations under Sections 3.3, 3.5 and 3.12. The Architect's review shall not constitute approval of safety precautions or, unless otherwise specifically stated by the Architect, of any construction means, methods, techniques, sequences or procedures. The Architect's approval of a specific item shall not indicate approval of an assembly of which the item is a component.

§ 4.2.8 The Architect will prepare Change Orders and Construction Change Directives, and may authorize minor changes in the Work as provided in Section 7.4. The Architect will investigate and make determinations and recommendations regarding concealed and unknown conditions as provided in Section 3.7.4.

§ 4.2.9 The Architect will conduct inspections to determine the date or dates of Substantial Completion and the date of final completion; issue Certificates of Substantial Completion pursuant to Section 9.8; receive and forward to the Owner, for the Owner's review and records, written warranties and related documents required by the Contract and assembled by the Contractor pursuant to Section 9.10; and issue a final Certificate for Payment pursuant to Section 9.10.

§ 4.2.10 If the Owner and Architect agree, the Architect will provide one or more project representatives to assist in carrying out the Architect's responsibilities at the site. The duties, responsibilities and limitations of authority of such project representatives shall be as set forth in an exhibit to be incorporated in the Contract Documents.

§ 4.2.11 The Architect will interpret and decide matters concerning performance under, and requirements of, the Contract Documents on written request of either the Owner or Contractor. The Architect's response to such requests will be made in writing within any time limits agreed upon or otherwise with reasonable promptness.

§ 4.2.12 Interpretations and decisions of the Architect will be consistent with the intent of, and reasonably inferable from, the Contract Documents and will be in writing or in the form of drawings. When making such interpretations and decisions, the Architect will endeavor to secure faithful performance by both Owner and Contractor, will not show partiality to either and will not be liable for results of interpretations or decisions rendered in good faith.

§ 4.2.13 The Architect's decisions on matters relating to aesthetic effect will be final if consistent with the intent expressed in the Contract Documents.

§ 4.2.14 The Architect will review and respond to requests for information about the Contract Documents. The Architect's response to such requests will be made in writing within any time limits agreed upon or otherwise with reasonable promptness. If appropriate, the Architect will prepare and issue supplemental Drawings and Specifications in response to the requests for information.

ARTICLE 5 SUBCONTRACTORS

§ 5.1 DEFINITIONS

§ 5.1.1 A Subcontractor is a person or entity who has a direct contract with the Contractor to perform a portion of the Work at the site. The term "Subcontractor" is referred to throughout the Contract Documents as if singular in

AIA Document A201™ – 2007. Copyright © 1911, 1915, 1918, 1925, 1937, 1951, 1958, 1961, 1963, 1966, 1970, 1976, 1987, 1997 and 2007 by The American Institute of Architects. **All rights reserved. WARNING: This AIA® Document is protected by U.S. Copyright Law and International Treaties. Unauthorized reproduction or distribution of this AIA® Document, or any portion of it, may result in severe civil and criminal penalties, and will be prosecuted to the maximum extent possible under the law.** This document was produced by AIA software at 08:39:36 on 11/21/2016 under Order No.7150521749_1 which expires on 10/03/2017, and is not for resale.
User Notes: (844049242)

number and means a Subcontractor or an authorized representative of the Subcontractor. The term "Subcontractor" does not include a separate contractor or subcontractors of a separate contractor.

§ 5.1.2 A Sub-subcontractor is a person or entity who has a direct or indirect contract with a Subcontractor to perform a portion of the Work at the site. The term "Sub-subcontractor" is referred to throughout the Contract Documents as if singular in number and means a Sub-subcontractor or an authorized representative of the Sub-subcontractor.

§ 5.2 AWARD OF SUBCONTRACTS AND OTHER CONTRACTS FOR PORTIONS OF THE WORK

§ 5.2.1 Unless otherwise stated in the Contract Documents or the bidding requirements, the Contractor, as soon as practicable after award of the Contract, shall furnish in writing to the Owner through the Architect the names of persons or entities (including those who are to furnish materials or equipment fabricated to a special design) proposed for each principal portion of the Work. The Architect may reply within 14 days to the Contractor in writing stating (1) whether the Owner or the Architect has reasonable objection to any such proposed person or entity or (2) that the Architect requires additional time for review. Failure of the Owner or Architect to reply within the 14-day period shall constitute notice of no reasonable objection.

§ 5.2.2 The Contractor shall not contract with a proposed person or entity to whom the Owner or Architect has made reasonable and timely objection. The Contractor shall not be required to contract with anyone to whom the Contractor has made reasonable objection.

§ 5.2.3 If the Owner or Architect has reasonable objection to a person or entity proposed by the Contractor, the Contractor shall propose another to whom the Owner or Architect has no reasonable objection. If the proposed but rejected Subcontractor was reasonably capable of performing the Work, the Contract Sum and Contract Time shall be increased or decreased by the difference, if any, occasioned by such change, and an appropriate Change Order shall be issued before commencement of the substitute Subcontractor's Work. However, no increase in the Contract Sum or Contract Time shall be allowed for such change unless the Contractor has acted promptly and responsively in submitting names as required.

§ 5.2.4 The Contractor shall not substitute a Subcontractor, person or entity previously selected if the Owner or Architect makes reasonable objection to such substitution.

§ 5.3 SUBCONTRACTUAL RELATIONS

By appropriate agreement, written where legally required for validity, the Contractor shall require each Subcontractor, to the extent of the Work to be performed by the Subcontractor, to be bound to the Contractor by terms of the Contract Documents, and to assume toward the Contractor all the obligations and responsibilities, including the responsibility for safety of the Subcontractor's Work, which the Contractor, by these Documents, assumes toward the Owner and Architect. Each subcontract agreement shall preserve and protect the rights of the Owner and Architect under the Contract Documents with respect to the Work to be performed by the Subcontractor so that subcontracting thereof will not prejudice such rights, and shall allow to the Subcontractor, unless specifically provided otherwise in the subcontract agreement, the benefit of all rights, remedies and redress against the Contractor that the Contractor, by the Contract Documents, has against the Owner. Where appropriate, the Contractor shall require each Subcontractor to enter into similar agreements with Sub-subcontractors. The Contractor shall make available to each proposed Subcontractor, prior to the execution of the subcontract agreement, copies of the Contract Documents to which the Subcontractor will be bound, and, upon written request of the Subcontractor, identify to the Subcontractor terms and conditions of the proposed subcontract agreement that may be at variance with the Contract Documents. Subcontractors will similarly make copies of applicable portions of such documents available to their respective proposed Sub-subcontractors.

§ 5.4 CONTINGENT ASSIGNMENT OF SUBCONTRACTS

§ 5.4.1 Each subcontract agreement for a portion of the Work is assigned by the Contractor to the Owner, provided that

- **.1** assignment is effective only after termination of the Contract by the Owner for cause pursuant to Section 14.2 and only for those subcontract agreements that the Owner accepts by notifying the Subcontractor and Contractor in writing; and
- **.2** assignment is subject to the prior rights of the surety, if any, obligated under bond relating to the Contract.

AIA Document A201™ – 2007. Copyright © 1911, 1915, 1918, 1925, 1937, 1951, 1958, 1961, 1963, 1966, 1970, 1976, 1987, 1997 and 2007 by The American Institute of Architects. **All rights reserved. WARNING: This AIA® Document is protected by U.S. Copyright Law and International Treaties. Unauthorized reproduction or distribution of this AIA® Document, or any portion of it, may result in severe civil and criminal penalties, and will be prosecuted to the maximum extent possible under the law.** This document was produced by AIA software at 08:39:36 on 11/21/2016 under Order No.7150521749_1 which expires on 10/03/2017, and is not for resale.
User Notes:

When the Owner accepts the assignment of a subcontract agreement, the Owner assumes the Contractor's rights and obligations under the subcontract.

§ 5.4.2 Upon such assignment, if the Work has been suspended for more than 30 days, the Subcontractor's compensation shall be equitably adjusted for increases in cost resulting from the suspension.

§ 5.4.3 Upon such assignment to the Owner under this Section 5.4, the Owner may further assign the subcontract to a successor contractor or other entity. If the Owner assigns the subcontract to a successor contractor or other entity, the Owner shall nevertheless remain legally responsible for all of the successor contractor's obligations under the subcontract.

ARTICLE 6 CONSTRUCTION BY OWNER OR BY SEPARATE CONTRACTORS

§ 6.1 OWNER'S RIGHT TO PERFORM CONSTRUCTION AND TO AWARD SEPARATE CONTRACTS

§ 6.1.1 The Owner reserves the right to perform construction or operations related to the Project with the Owner's own forces, and to award separate contracts in connection with other portions of the Project or other construction or operations on the site under Conditions of the Contract identical or substantially similar to these including those portions related to insurance and waiver of subrogation. If the Contractor claims that delay or additional cost is involved because of such action by the Owner, the Contractor shall make such Claim as provided in Article 15.

§ 6.1.2 When separate contracts are awarded for different portions of the Project or other construction or operations on the site, the term "Contractor" in the Contract Documents in each case shall mean the Contractor who executes each separate Owner-Contractor Agreement.

§ 6.1.3 The Owner shall provide for coordination of the activities of the Owner's own forces and of each separate contractor with the Work of the Contractor, who shall cooperate with them. The Contractor shall participate with other separate contractors and the Owner in reviewing their construction schedules. The Contractor shall make any revisions to the construction schedule deemed necessary after a joint review and mutual agreement. The construction schedules shall then constitute the schedules to be used by the Contractor, separate contractors and the Owner until subsequently revised.

§ 6.1.4 Unless otherwise provided in the Contract Documents, when the Owner performs construction or operations related to the Project with the Owner's own forces, the Owner shall be deemed to be subject to the same obligations and to have the same rights that apply to the Contractor under the Conditions of the Contract, including, without excluding others, those stated in Article 3, this Article 6 and Articles 10, 11 and 12.

§ 6.2 MUTUAL RESPONSIBILITY

§ 6.2.1 The Contractor shall afford the Owner and separate contractors reasonable opportunity for introduction and storage of their materials and equipment and performance of their activities, and shall connect and coordinate the Contractor's construction and operations with theirs as required by the Contract Documents.

§ 6.2.2 If part of the Contractor's Work depends for proper execution or results upon construction or operations by the Owner or a separate contractor, the Contractor shall, prior to proceeding with that portion of the Work, promptly report to the Architect apparent discrepancies or defects in such other construction that would render it unsuitable for such proper execution and results. Failure of the Contractor so to report shall constitute an acknowledgment that the Owner's or separate contractor's completed or partially completed construction is fit and proper to receive the Contractor's Work, except as to defects not then reasonably discoverable.

§ 6.2.3 The Contractor shall reimburse the Owner for costs the Owner incurs that are payable to a separate contractor because of the Contractor's delays, improperly timed activities or defective construction. The Owner shall be responsible to the Contractor for costs the Contractor incurs because of a separate contractor's delays, improperly timed activities, damage to the Work or defective construction.

§ 6.2.4 The Contractor shall promptly remedy damage the Contractor wrongfully causes to completed or partially completed construction or to property of the Owner or separate contractors as provided in Section 10.2.5.

AIA Document A201™ – 2007. Copyright © 1911, 1915, 1918, 1925, 1937, 1951, 1958, 1961, 1963, 1966, 1970, 1976, 1987, 1997 and 2007 by The American Institute of Architects. **All rights reserved. WARNING: This AIA® Document is protected by U.S. Copyright Law and International Treaties. Unauthorized reproduction or distribution of this AIA® Document, or any portion of it, may result in severe civil and criminal penalties, and will be prosecuted to the maximum extent possible under the law.** This document was produced by AIA software at 08:39:36 on 11/21/2016 under Order No.7150521749_1 which expires on 10/03/2017, and is not for resale.
User Notes: (844049242)

§ 6.2.5 The Owner and each separate contractor shall have the same responsibilities for cutting and patching as are described for the Contractor in Section 3.14.

§ 6.3 OWNER'S RIGHT TO CLEAN UP

If a dispute arises among the Contractor, separate contractors and the Owner as to the responsibility under their respective contracts for maintaining the premises and surrounding area free from waste materials and rubbish, the Owner may clean up and the Architect will allocate the cost among those responsible.

ARTICLE 7 CHANGES IN THE WORK

§ 7.1 GENERAL

§ 7.1.1 Changes in the Work may be accomplished after execution of the Contract, and without invalidating the Contract, by Change Order, Construction Change Directive or order for a minor change in the Work, subject to the limitations stated in this Article 7 and elsewhere in the Contract Documents.

§ 7.1.2 A Change Order shall be based upon agreement among the Owner, Contractor and Architect; a Construction Change Directive requires agreement by the Owner and Architect and may or may not be agreed to by the Contractor; an order for a minor change in the Work may be issued by the Architect alone.

§ 7.1.3 Changes in the Work shall be performed under applicable provisions of the Contract Documents, and the Contractor shall proceed promptly, unless otherwise provided in the Change Order, Construction Change Directive or order for a minor change in the Work.

§ 7.2 CHANGE ORDERS

§ 7.2.1 A Change Order is a written instrument prepared by the Architect and signed by the Owner, Contractor and Architect stating their agreement upon all of the following:

- **.1** The change in the Work;
- **.2** The amount of the adjustment, if any, in the Contract Sum; and
- **.3** The extent of the adjustment, if any, in the Contract Time.

§ 7.3 CONSTRUCTION CHANGE DIRECTIVES

§ 7.3.1 A Construction Change Directive is a written order prepared by the Architect and signed by the Owner and Architect, directing a change in the Work prior to agreement on adjustment, if any, in the Contract Sum or Contract Time, or both. The Owner may by Construction Change Directive, without invalidating the Contract, order changes in the Work within the general scope of the Contract consisting of additions, deletions or other revisions, the Contract Sum and Contract Time being adjusted accordingly.

§ 7.3.2 A Construction Change Directive shall be used in the absence of total agreement on the terms of a Change Order.

§ 7.3.3 If the Construction Change Directive provides for an adjustment to the Contract Sum, the adjustment shall be based on one of the following methods:

- **.1** Mutual acceptance of a lump sum properly itemized and supported by sufficient substantiating data to permit evaluation;
- **.2** Unit prices stated in the Contract Documents or subsequently agreed upon;
- **.3** Cost to be determined in a manner agreed upon by the parties and a mutually acceptable fixed or percentage fee; or
- **.4** As provided in Section 7.3.7.

§ 7.3.4 If unit prices are stated in the Contract Documents or subsequently agreed upon, and if quantities originally contemplated are materially changed in a proposed Change Order or Construction Change Directive so that application of such unit prices to quantities of Work proposed will cause substantial inequity to the Owner or Contractor, the applicable unit prices shall be equitably adjusted.

§ 7.3.5 Upon receipt of a Construction Change Directive, the Contractor shall promptly proceed with the change in the Work involved and advise the Architect of the Contractor's agreement or disagreement with the method, if any, provided in the Construction Change Directive for determining the proposed adjustment in the Contract Sum or Contract Time.

AIA Document A201™ – 2007. Copyright © 1911, 1915, 1918, 1925, 1937, 1951, 1958, 1961, 1963, 1966, 1970, 1976, 1987, 1997 and 2007 by The American Institute of Architects. **All rights reserved. WARNING: This AIA® Document is protected by U.S. Copyright Law and International Treaties. Unauthorized reproduction or distribution of this AIA® Document, or any portion of it, may result in severe civil and criminal penalties, and will be prosecuted to the maximum extent possible under the law.** This document was produced by AIA software at 08:39:36 on 11/21/2016 under Order No.7150521749_1 which expires on 10/03/2017, and is not for resale.
User Notes: (844049242)

§ 7.3.6 A Construction Change Directive signed by the Contractor indicates the Contractor's agreement therewith, including adjustment in Contract Sum and Contract Time or the method for determining them. Such agreement shall be effective immediately and shall be recorded as a Change Order.

§ 7.3.7 If the Contractor does not respond promptly or disagrees with the method for adjustment in the Contract Sum, the Architect shall determine the method and the adjustment on the basis of reasonable expenditures and savings of those performing the Work attributable to the change, including, in case of an increase in the Contract Sum, an amount for overhead and profit as set forth in the Agreement, or if no such amount is set forth in the Agreement, a reasonable amount. In such case, and also under Section 7.3.3.3, the Contractor shall keep and present, in such form as the Architect may prescribe, an itemized accounting together with appropriate supporting data. Unless otherwise provided in the Contract Documents, costs for the purposes of this Section 7.3.7 shall be limited to the following:

- **.1** Costs of labor, including social security, old age and unemployment insurance, fringe benefits required by agreement or custom, and workers' compensation insurance;
- **.2** Costs of materials, supplies and equipment, including cost of transportation, whether incorporated or consumed;
- **.3** Rental costs of machinery and equipment, exclusive of hand tools, whether rented from the Contractor or others;
- **.4** Costs of premiums for all bonds and insurance, permit fees, and sales, use or similar taxes related to the Work; and
- **.5** Additional costs of supervision and field office personnel directly attributable to the change.

§ 7.3.8 The amount of credit to be allowed by the Contractor to the Owner for a deletion or change that results in a net decrease in the Contract Sum shall be actual net cost as confirmed by the Architect. When both additions and credits covering related Work or substitutions are involved in a change, the allowance for overhead and profit shall be figured on the basis of net increase, if any, with respect to that change.

§ 7.3.9 Pending final determination of the total cost of a Construction Change Directive to the Owner, the Contractor may request payment for Work completed under the Construction Change Directive in Applications for Payment. The Architect will make an interim determination for purposes of monthly certification for payment for those costs and certify for payment the amount that the Architect determines, in the Architect's professional judgment, to be reasonably justified. The Architect's interim determination of cost shall adjust the Contract Sum on the same basis as a Change Order, subject to the right of either party to disagree and assert a Claim in accordance with Article 15.

§ 7.3.10 When the Owner and Contractor agree with a determination made by the Architect concerning the adjustments in the Contract Sum and Contract Time, or otherwise reach agreement upon the adjustments, such agreement shall be effective immediately and the Architect will prepare a Change Order. Change Orders may be issued for all or any part of a Construction Change Directive.

§ 7.4 MINOR CHANGES IN THE WORK

The Architect has authority to order minor changes in the Work not involving adjustment in the Contract Sum or extension of the Contract Time and not inconsistent with the intent of the Contract Documents. Such changes will be effected by written order signed by the Architect and shall be binding on the Owner and Contractor.

ARTICLE 8 TIME

§ 8.1 DEFINITIONS

§ 8.1.1 Unless otherwise provided, Contract Time is the period of time, including authorized adjustments, allotted in the Contract Documents for Substantial Completion of the Work.

§ 8.1.2 The date of commencement of the Work is the date established in the Agreement.

§ 8.1.3 The date of Substantial Completion is the date certified by the Architect in accordance with Section 9.8.

§ 8.1.4 The term "day" as used in the Contract Documents shall mean calendar day unless otherwise specifically defined.

AIA Document A201™ – 2007. Copyright © 1911, 1915, 1918, 1925, 1937, 1951, 1958, 1961, 1963, 1966, 1970, 1976, 1987, 1997 and 2007 by The American Institute of Architects. **All rights reserved. WARNING: This AIA® Document is protected by U.S. Copyright Law and International Treaties. Unauthorized reproduction or distribution of this AIA® Document, or any portion of it, may result in severe civil and criminal penalties, and will be prosecuted to the maximum extent possible under the law.** This document was produced by AIA software at 08:39:36 on 11/21/2016 under Order No.7150521749_1 which expires on 10/03/2017, and is not for resale.
User Notes: (844049242)

§ 8.2 PROGRESS AND COMPLETION

§ 8.2.1 Time limits stated in the Contract Documents are of the essence of the Contract. By executing the Agreement the Contractor confirms that the Contract Time is a reasonable period for performing the Work.

§ 8.2.2 The Contractor shall not knowingly, except by agreement or instruction of the Owner in writing, prematurely commence operations on the site or elsewhere prior to the effective date of insurance required by Article 11 to be furnished by the Contractor and Owner. The date of commencement of the Work shall not be changed by the effective date of such insurance.

§ 8.2.3 The Contractor shall proceed expeditiously with adequate forces and shall achieve Substantial Completion within the Contract Time.

§ 8.3 DELAYS AND EXTENSIONS OF TIME

§ 8.3.1 If the Contractor is delayed at any time in the commencement or progress of the Work by an act or neglect of the Owner or Architect, or of an employee of either, or of a separate contractor employed by the Owner; or by changes ordered in the Work; or by labor disputes, fire, unusual delay in deliveries, unavoidable casualties or other causes beyond the Contractor's control; or by delay authorized by the Owner pending mediation and arbitration; or by other causes that the Architect determines may justify delay, then the Contract Time shall be extended by Change Order for such reasonable time as the Architect may determine.

§ 8.3.2 Claims relating to time shall be made in accordance with applicable provisions of Article 15.

§ 8.3.3 This Section 8.3 does not preclude recovery of damages for delay by either party under other provisions of the Contract Documents.

ARTICLE 9 PAYMENTS AND COMPLETION

§ 9.1 CONTRACT SUM

The Contract Sum is stated in the Agreement and, including authorized adjustments, is the total amount payable by the Owner to the Contractor for performance of the Work under the Contract Documents.

§ 9.2 SCHEDULE OF VALUES

Where the Contract is based on a stipulated sum or Guaranteed Maximum Price, the Contractor shall submit to the Architect, before the first Application for Payment, a schedule of values allocating the entire Contract Sum to the various portions of the Work and prepared in such form and supported by such data to substantiate its accuracy as the Architect may require. This schedule, unless objected to by the Architect, shall be used as a basis for reviewing the Contractor's Applications for Payment.

§ 9.3 APPLICATIONS FOR PAYMENT

§ 9.3.1 At least ten days before the date established for each progress payment, the Contractor shall submit to the Architect an itemized Application for Payment prepared in accordance with the schedule of values, if required under Section 9.2, for completed portions of the Work. Such application shall be notarized, if required, and supported by such data substantiating the Contractor's right to payment as the Owner or Architect may require, such as copies of requisitions from Subcontractors and material suppliers, and shall reflect retainage if provided for in the Contract Documents.

§ 9.3.1.1 As provided in Section 7.3.9, such applications may include requests for payment on account of changes in the Work that have been properly authorized by Construction Change Directives, or by interim determinations of the Architect, but not yet included in Change Orders.

§ 9.3.1.2 Applications for Payment shall not include requests for payment for portions of the Work for which the Contractor does not intend to pay a Subcontractor or material supplier, unless such Work has been performed by others whom the Contractor intends to pay.

§ 9.3.2 Unless otherwise provided in the Contract Documents, payments shall be made on account of materials and equipment delivered and suitably stored at the site for subsequent incorporation in the Work. If approved in advance by the Owner, payment may similarly be made for materials and equipment suitably stored off the site at a location agreed upon in writing. Payment for materials and equipment stored on or off the site shall be conditioned upon

AIA Document A201™ – 2007. Copyright © 1911, 1915, 1918, 1925, 1937, 1951, 1958, 1961, 1963, 1966, 1970, 1976, 1987, 1997 and 2007 by The American Institute of Architects. **All rights reserved. WARNING: This AIA® Document is protected by U.S. Copyright Law and International Treaties. Unauthorized reproduction or distribution of this AIA® Document, or any portion of it, may result in severe civil and criminal penalties, and will be prosecuted to the maximum extent possible under the law.** This document was produced by AIA software at 08:39:36 on 11/21/2016 under Order No.7150521749_1 which expires on 10/03/2017, and is not for resale.
User Notes: (844049242)

compliance by the Contractor with procedures satisfactory to the Owner to establish the Owner's title to such materials and equipment or otherwise protect the Owner's interest, and shall include the costs of applicable insurance, storage and transportation to the site for such materials and equipment stored off the site.

§ 9.3.3 The Contractor warrants that title to all Work covered by an Application for Payment will pass to the Owner no later than the time of payment. The Contractor further warrants that upon submittal of an Application for Payment all Work for which Certificates for Payment have been previously issued and payments received from the Owner shall, to the best of the Contractor's knowledge, information and belief, be free and clear of liens, claims, security interests or encumbrances in favor of the Contractor, Subcontractors, material suppliers, or other persons or entities making a claim by reason of having provided labor, materials and equipment relating to the Work.

§ 9.4 CERTIFICATES FOR PAYMENT

§ 9.4.1 The Architect will, within seven days after receipt of the Contractor's Application for Payment, either issue to the Owner a Certificate for Payment, with a copy to the Contractor, for such amount as the Architect determines is properly due, or notify the Contractor and Owner in writing of the Architect's reasons for withholding certification in whole or in part as provided in Section 9.5.1.

§ 9.4.2 The issuance of a Certificate for Payment will constitute a representation by the Architect to the Owner, based on the Architect's evaluation of the Work and the data comprising the Application for Payment, that, to the best of the Architect's knowledge, information and belief, the Work has progressed to the point indicated and that the quality of the Work is in accordance with the Contract Documents. The foregoing representations are subject to an evaluation of the Work for conformance with the Contract Documents upon Substantial Completion, to results of subsequent tests and inspections, to correction of minor deviations from the Contract Documents prior to completion and to specific qualifications expressed by the Architect. The issuance of a Certificate for Payment will further constitute a representation that the Contractor is entitled to payment in the amount certified. However, the issuance of a Certificate for Payment will not be a representation that the Architect has (1) made exhaustive or continuous on-site inspections to check the quality or quantity of the Work, (2) reviewed construction means, methods, techniques, sequences or procedures, (3) reviewed copies of requisitions received from Subcontractors and material suppliers and other data requested by the Owner to substantiate the Contractor's right to payment, or (4) made examination to ascertain how or for what purpose the Contractor has used money previously paid on account of the Contract Sum.

§ 9.5 DECISIONS TO WITHHOLD CERTIFICATION

§ 9.5.1 The Architect may withhold a Certificate for Payment in whole or in part, to the extent reasonably necessary to protect the Owner, if in the Architect's opinion the representations to the Owner required by Section 9.4.2 cannot be made. If the Architect is unable to certify payment in the amount of the Application, the Architect will notify the Contractor and Owner as provided in Section 9.4.1. If the Contractor and Architect cannot agree on a revised amount, the Architect will promptly issue a Certificate for Payment for the amount for which the Architect is able to make such representations to the Owner. The Architect may also withhold a Certificate for Payment or, because of subsequently discovered evidence, may nullify the whole or a part of a Certificate for Payment previously issued, to such extent as may be necessary in the Architect's opinion to protect the Owner from loss for which the Contractor is responsible, including loss resulting from acts and omissions described in Section 3.3.2, because of

- **.1** defective Work not remedied;
- **.2** third party claims filed or reasonable evidence indicating probable filing of such claims unless security acceptable to the Owner is provided by the Contractor;
- **.3** failure of the Contractor to make payments properly to Subcontractors or for labor, materials or equipment;
- **.4** reasonable evidence that the Work cannot be completed for the unpaid balance of the Contract Sum;
- **.5** damage to the Owner or a separate contractor;
- **.6** reasonable evidence that the Work will not be completed within the Contract Time, and that the unpaid balance would not be adequate to cover actual or liquidated damages for the anticipated delay; or
- **.7** repeated failure to carry out the Work in accordance with the Contract Documents.

§ 9.5.2 When the above reasons for withholding certification are removed, certification will be made for amounts previously withheld.

AIA Document A201™ – 2007. Copyright © 1911, 1915, 1918, 1925, 1937, 1951, 1958, 1961, 1963, 1966, 1970, 1976, 1987, 1997 and 2007 by The American Institute of Architects. **All rights reserved. WARNING: This AIA® Document is protected by U.S. Copyright Law and International Treaties. Unauthorized reproduction or distribution of this AIA® Document, or any portion of it, may result in severe civil and criminal penalties, and will be prosecuted to the maximum extent possible under the law.** This document was produced by AIA software at 08:39:36 on 11/21/2016 under Order No.7150521749_1 which expires on 10/03/2017, and is not for resale.
User Notes: (844049242)

§ 9.5.3 If the Architect withholds certification for payment under Section 9.5.1.3, the Owner may, at its sole option, issue joint checks to the Contractor and to any Subcontractor or material or equipment suppliers to whom the Contractor failed to make payment for Work properly performed or material or equipment suitably delivered. If the Owner makes payments by joint check, the Owner shall notify the Architect and the Architect will reflect such payment on the next Certificate for Payment.

§ 9.6 PROGRESS PAYMENTS

§ 9.6.1 After the Architect has issued a Certificate for Payment, the Owner shall make payment in the manner and within the time provided in the Contract Documents, and shall so notify the Architect.

§ 9.6.2 The Contractor shall pay each Subcontractor no later than seven days after receipt of payment from the Owner the amount to which the Subcontractor is entitled, reflecting percentages actually retained from payments to the Contractor on account of the Subcontractor's portion of the Work. The Contractor shall, by appropriate agreement with each Subcontractor, require each Subcontractor to make payments to Sub-subcontractors in a similar manner.

§ 9.6.3 The Architect will, on request, furnish to a Subcontractor, if practicable, information regarding percentages of completion or amounts applied for by the Contractor and action taken thereon by the Architect and Owner on account of portions of the Work done by such Subcontractor.

§ 9.6.4 The Owner has the right to request written evidence from the Contractor that the Contractor has properly paid Subcontractors and material and equipment suppliers amounts paid by the Owner to the Contractor for subcontracted Work. If the Contractor fails to furnish such evidence within seven days, the Owner shall have the right to contact Subcontractors to ascertain whether they have been properly paid. Neither the Owner nor Architect shall have an obligation to pay or to see to the payment of money to a Subcontractor, except as may otherwise be required by law.

§ 9.6.5 Contractor payments to material and equipment suppliers shall be treated in a manner similar to that provided in Sections 9.6.2, 9.6.3 and 9.6.4.

§ 9.6.6 A Certificate for Payment, a progress payment, or partial or entire use or occupancy of the Project by the Owner shall not constitute acceptance of Work not in accordance with the Contract Documents.

§ 9.6.7 Unless the Contractor provides the Owner with a payment bond in the full penal sum of the Contract Sum, payments received by the Contractor for Work properly performed by Subcontractors and suppliers shall be held by the Contractor for those Subcontractors or suppliers who performed Work or furnished materials, or both, under contract with the Contractor for which payment was made by the Owner. Nothing contained herein shall require money to be placed in a separate account and not commingled with money of the Contractor, shall create any fiduciary liability or tort liability on the part of the Contractor for breach of trust or shall entitle any person or entity to an award of punitive damages against the Contractor for breach of the requirements of this provision.

§ 9.7 FAILURE OF PAYMENT

(Paragraph deleted)

Intentionally Omitted.

§ 9.8 SUBSTANTIAL COMPLETION

§ 9.8.1 Substantial Completion is the stage in the progress of the Work when the Work or designated portion thereof is sufficiently complete in accordance with the Contract Documents so that the Owner can occupy or utilize the Work for its intended use.

§ 9.8.2 When the Contractor considers that the Work, or a portion thereof which the Owner agrees to accept separately, is substantially complete, the Contractor shall prepare and submit to the Architect a comprehensive list of items to be completed or corrected prior to final payment. Failure to include an item on such list does not alter the responsibility of the Contractor to complete all Work in accordance with the Contract Documents.

§ 9.8.3 Upon receipt of the Contractor's list, the Architect will make an inspection to determine whether the Work or designated portion thereof is substantially complete. If the Architect's inspection discloses any item, whether or not included on the Contractor's list, which is not sufficiently complete in accordance with the Contract Documents so

AIA Document A201™ – 2007. Copyright © 1911, 1915, 1918, 1925, 1937, 1951, 1958, 1961, 1963, 1966, 1970, 1976, 1987, 1997 and 2007 by The American Institute of Architects. **All rights reserved. WARNING: This AIA® Document is protected by U.S. Copyright Law and International Treaties. Unauthorized reproduction or distribution of this AIA® Document, or any portion of it, may result in severe civil and criminal penalties, and will be prosecuted to the maximum extent possible under the law.** This document was produced by AIA software at 08:39:36 on 11/21/2016 under Order No.7150521749_1 which expires on 10/03/2017, and is not for resale.
User Notes: (844049242)

that the Owner can occupy or utilize the Work or designated portion thereof for its intended use, the Contractor shall, before issuance of the Certificate of Substantial Completion, complete or correct such item upon notification by the Architect. In such case, the Contractor shall then submit a request for another inspection by the Architect to determine Substantial Completion.

§ 9.8.4 When the Work or designated portion thereof is substantially complete, the Architect will prepare a Certificate of Substantial Completion that shall establish the date of Substantial Completion, shall establish responsibilities of the Owner and Contractor for security, maintenance, heat, utilities, damage to the Work and insurance, and shall fix the time within which the Contractor shall finish all items on the list accompanying the Certificate. Warranties required by the Contract Documents shall commence on the date of Substantial Completion of the Work or designated portion thereof unless otherwise provided in the Certificate of Substantial Completion.

§ 9.8.5 The Certificate of Substantial Completion shall be submitted to the Owner and Contractor for their written acceptance of responsibilities assigned to them in such Certificate. Upon such acceptance and consent of surety, if any, the Owner shall make payment of retainage applying to such Work or designated portion thereof. Such payment shall be adjusted for Work that is incomplete or not in accordance with the requirements of the Contract Documents.

§ 9.9 PARTIAL OCCUPANCY OR USE

§ 9.9.1 The Owner may occupy or use any completed or partially completed portion of the Work at any stage when such portion is designated by separate agreement with the Contractor, provided such occupancy or use is consented to by the insurer as required under Section 11.3.1.5 and authorized by public authorities having jurisdiction over the Project. Such partial occupancy or use may commence whether or not the portion is substantially complete, provided the Owner and Contractor have accepted in writing the responsibilities assigned to each of them for payments, retainage, if any, security, maintenance, heat, utilities, damage to the Work and insurance, and have agreed in writing concerning the period for correction of the Work and commencement of warranties required by the Contract Documents. When the Contractor considers a portion substantially complete, the Contractor shall prepare and submit a list to the Architect as provided under Section 9.8.2. Consent of the Contractor to partial occupancy or use shall not be unreasonably withheld. The stage of the progress of the Work shall be determined by written agreement between the Owner and Contractor or, if no agreement is reached, by decision of the Architect.

§ 9.9.2 Immediately prior to such partial occupancy or use, the Owner, Contractor and Architect shall jointly inspect the area to be occupied or portion of the Work to be used in order to determine and record the condition of the Work.

§ 9.9.3 Unless otherwise agreed upon, partial occupancy or use of a portion or portions of the Work shall not constitute acceptance of Work not complying with the requirements of the Contract Documents.

§ 9.10 FINAL COMPLETION AND FINAL PAYMENT

§ 9.10.1 Upon receipt of the Contractor's written notice that the Work is ready for final inspection and acceptance and upon receipt of a final Application for Payment, the Architect will promptly make such inspection and, when the Architect finds the Work acceptable under the Contract Documents and the Contract fully performed, the Architect will promptly issue a final Certificate for Payment stating that to the best of the Architect's knowledge, information and belief, and on the basis of the Architect's on-site visits and inspections, the Work has been completed in accordance with terms and conditions of the Contract Documents and that the entire balance found to be due the Contractor and noted in the final Certificate is due and payable. The Architect's final Certificate for Payment will constitute a further representation that conditions listed in Section 9.10.2 as precedent to the Contractor's being entitled to final payment have been fulfilled.

§ 9.10.2 Neither final payment nor any remaining retained percentage shall become due until the Contractor submits to the Architect (1) an affidavit that payrolls, bills for materials and equipment, and other indebtedness connected with the Work for which the Owner or the Owner's property might be responsible or encumbered (less amounts withheld by Owner) have been paid or otherwise satisfied, (2) a certificate evidencing that insurance required by the Contract Documents to remain in force after final payment is currently in effect and will not be canceled or allowed to expire until at least 30 days' prior written notice has been given to the Owner, (3) a written statement that the Contractor knows of no substantial reason that the insurance will not be renewable to cover the period required by the Contract Documents, (4) consent of surety, if any, to final payment and (5), if required by the Owner, other data establishing payment or satisfaction of obligations, such as receipts, releases and waivers of liens, claims, security

AIA Document A201™ – 2007. Copyright © 1911, 1915, 1918, 1925, 1937, 1951, 1958, 1961, 1963, 1966, 1970, 1976, 1987, 1997 and 2007 by The American Institute of Architects. **All rights reserved. WARNING: This AIA® Document is protected by U.S. Copyright Law and International Treaties. Unauthorized reproduction or distribution of this AIA® Document, or any portion of it, may result in severe civil and criminal penalties, and will be prosecuted to the maximum extent possible under the law.** This document was produced by AIA software at 08:39:36 on 11/21/2016 under Order No.7150521749_1 which expires on 10/03/2017, and is not for resale.
User Notes:

interests or encumbrances arising out of the Contract, to the extent and in such form as may be designated by the Owner. If a Subcontractor refuses to furnish a release or waiver required by the Owner, the Contractor may furnish a bond satisfactory to the Owner to indemnify the Owner against such lien. If such lien remains unsatisfied after payments are made, the Contractor shall refund to the Owner all money that the Owner may be compelled to pay in discharging such lien, including all costs and reasonable attorneys' fees.

§ 9.10.3 If, after Substantial Completion of the Work, final completion thereof is materially delayed through no fault of the Contractor or by issuance of Change Orders affecting final completion, and the Architect so confirms, the Owner shall, upon application by the Contractor and certification by the Architect, and without terminating the Contract, make payment of the balance due for that portion of the Work fully completed and accepted. If the remaining balance for Work not fully completed or corrected is less than retainage stipulated in the Contract Documents, and if bonds have been furnished, the written consent of surety to payment of the balance due for that portion of the Work fully completed and accepted shall be submitted by the Contractor to the Architect prior to certification of such payment. Such payment shall be made under terms and conditions governing final payment, except that it shall not constitute a waiver of claims.

(Paragraphs deleted)
§ 9.10.5 Acceptance of final payment by the Contractor, a Subcontractor or material supplier shall constitute a waiver of claims by that payee except those previously made in writing and identified by that payee as unsettled at the time of final Application for Payment.

ARTICLE 10 PROTECTION OF PERSONS AND PROPERTY

§ 10.1 SAFETY PRECAUTIONS AND PROGRAMS

The Contractor shall be responsible for initiating, maintaining and supervising all safety precautions and programs in connection with the performance of the Contract.

§ 10.2 SAFETY OF PERSONS AND PROPERTY

§ 10.2.1 The Contractor shall take reasonable precautions for safety of, and shall provide reasonable protection to prevent damage, injury or loss to

- **.1** employees on the Work and other persons who may be affected thereby;
- **.2** the Work and materials and equipment to be incorporated therein, whether in storage on or off the site, under care, custody or control of the Contractor or the Contractor's Subcontractors or Sub-subcontractors; and
- **.3** other property at the site or adjacent thereto, such as trees, shrubs, lawns, walks, pavements, roadways, structures and utilities not designated for removal, relocation or replacement in the course of construction.

§ 10.2.2 The Contractor shall comply with and give notices required by applicable laws, statutes, ordinances, codes, rules and regulations, and lawful orders of public authorities bearing on safety of persons or property or their protection from damage, injury or loss.

§ 10.2.3 The Contractor shall erect and maintain, as required by existing conditions and performance of the Contract, reasonable safeguards for safety and protection, including posting danger signs and other warnings against hazards, promulgating safety regulations and notifying owners and users of adjacent sites and utilities.

§ 10.2.4 When use or storage of explosives or other hazardous materials or equipment or unusual methods are necessary for execution of the Work, the Contractor shall exercise utmost care and carry on such activities under supervision of properly qualified personnel.

§ 10.2.5 The Contractor shall promptly remedy damage and loss (other than damage or loss insured under property insurance required by the Contract Documents) to property referred to in Sections 10.2.1.2 and 10.2.1.3 caused in whole or in part by the Contractor, a Subcontractor, a Sub-subcontractor, or anyone directly or indirectly employed by any of them, or by anyone for whose acts they may be liable and for which the Contractor is responsible under Sections 10.2.1.2 and 10.2.1.3, except damage or loss attributable to acts or omissions of the Owner or Architect or anyone directly or indirectly employed by either of them, or by anyone for whose acts either of them may be liable,

AIA Document A201™ – 2007. Copyright © 1911, 1915, 1918, 1925, 1937, 1951, 1958, 1961, 1963, 1966, 1970, 1976, 1987, 1997 and 2007 by The American Institute of Architects. **All rights reserved. WARNING: This AIA® Document is protected by U.S. Copyright Law and International Treaties. Unauthorized reproduction or distribution of this AIA® Document, or any portion of it, may result in severe civil and criminal penalties, and will be prosecuted to the maximum extent possible under the law.** This document was produced by AIA software at 08:39:36 on 11/21/2016 under Order No.7150521749_1 which expires on 10/03/2017, and is not for resale.
User Notes: (844049242)

and not attributable to the fault or negligence of the Contractor. The foregoing obligations of the Contractor are in addition to the Contractor's obligations under Section 3.18.

§ 10.2.6 The Contractor shall designate a responsible member of the Contractor's organization at the site whose duty shall be the prevention of accidents. This person shall be the Contractor's superintendent unless otherwise designated by the Contractor in writing to the Owner and Architect.

§ 10.2.7 The Contractor shall not permit any part of the construction or site to be loaded so as to cause damage or create an unsafe condition.

10.2.7.1 It is the Contractor's responsibility to initiate and maintain safety training and compliance programs that meet or exceed OSHA standards and all applicable Federal, State and local safety health and environmental regulations. The Owner maintains the right to inspect the work site to determine if conditions exist that could reasonably be expected to cause death, serious physical harm or will compromise the safety and health of the Owner; including visitors and contractor's employees and sub-employees. If such conditions exist, the Owner has the right to suspend work if deemed unsafe.

§ 10.2.8 INJURY OR DAMAGE TO PERSON OR PROPERTY

If either party suffers injury or damage to person or property because of an act or omission of the other party, or of others for whose acts such party is legally responsible, written notice of such injury or damage, whether or not insured, shall be given to the other party within a reasonable time after discovery. The notice shall provide sufficient detail to enable the other party to investigate the matter.

§ 10.3 HAZARDOUS MATERIALS

§ 10.3.1 The Contractor is responsible for compliance with any requirements included in the Contract Documents regarding hazardous materials. If the Contractor encounters a hazardous material or substance not addressed in the Contract Documents and if reasonable precautions will be inadequate to prevent foreseeable bodily injury or death to persons resulting from a material or substance, including but not limited to asbestos or polychlorinated biphenyl (PCB), encountered on the site by the Contractor, the Contractor shall, upon recognizing the condition, immediately stop Work in the affected area and report the condition to the Owner and Architect in writing.

§ 10.3.2 Upon receipt of the Contractor's written notice, the Owner shall obtain the services of a licensed laboratory to verify the presence or absence of the material or substance reported by the Contractor and, in the event such material or substance is found to be present, to cause it to be rendered harmless. Unless otherwise required by the Contract Documents, the Owner shall furnish in writing to the Contractor and Architect the names and qualifications of persons or entities who are to perform tests verifying the presence or absence of such material or substance or who are to perform the task of removal or safe containment of such material or substance. The Contractor and the Architect will promptly reply to the Owner in writing stating whether or not either has reasonable objection to the persons or entities proposed by the Owner. If either the Contractor or Architect has an objection to a person or entity proposed by the Owner, the Owner shall propose another to whom the Contractor and the Architect have no reasonable objection. When the material or substance has been rendered harmless, Work in the affected area shall resume upon written agreement of the Owner and Contractor. By Change Order, the Contract Time shall be extended appropriately and the Contract Sum shall be increased in the amount of the Contractor's reasonable additional costs of shut-down, delay and start-up.

§ 10.3.3 To the fullest extent permitted by law, the Owner shall indemnify and hold harmless the Contractor, Subcontractors, Architect, Architect's consultants and agents and employees of any of them from and against claims, damages, losses and expenses, including but not limited to attorneys' fees, arising out of or resulting from performance of the Work in the affected area if in fact the material or substance presents the risk of bodily injury or death as described in Section 10.3.1 and has not been rendered harmless, provided that such claim, damage, loss or expense is attributable to bodily injury, sickness, disease or death, or to injury to or destruction of tangible property (other than the Work itself), except to the extent that such damage, loss or expense is due to the fault or negligence of the party seeking indemnity.

§ 10.3.4 The Owner shall not be responsible under this Section 10.3 for materials or substances the Contractor brings to the site unless such materials or substances are required by the Contract Documents. The Owner shall be

AIA Document A201™ – 2007. Copyright © 1911, 1915, 1918, 1925, 1937, 1951, 1958, 1961, 1963, 1966, 1970, 1976, 1987, 1997 and 2007 by The American Institute of Architects. **All rights reserved. WARNING: This AIA® Document is protected by U.S. Copyright Law and International Treaties. Unauthorized reproduction or distribution of this AIA® Document, or any portion of it, may result in severe civil and criminal penalties, and will be prosecuted to the maximum extent possible under the law.** This document was produced by AIA software at 08:39:36 on 11/21/2016 under Order No.7150521749_1 which expires on 10/03/2017, and is not for resale.
User Notes: (844049242)

responsible for materials or substances required by the Contract Documents, except to the extent of the Contractor's fault or negligence in the use and handling of such materials or substances.

§ 10.3.5 The Contractor shall indemnify the Owner for the cost and expense the Owner incurs (1) for remediation of a material or substance the Contractor brings to the site and negligently handles, or (2) where the Contractor fails to perform its obligations under Section 10.3.1, except to the extent that the cost and expense are due to the Owner's fault or negligence.

§ 10.3.6 If, without negligence on the part of the Contractor, the Contractor is held liable by a government agency for the cost of remediation of a hazardous material or substance solely by reason of performing Work as required by the Contract Documents, the Owner shall indemnify the Contractor for all cost and expense thereby incurred.

§ 10.4 EMERGENCIES

In an emergency affecting safety of persons or property, the Contractor shall act, at the Contractor's discretion, to prevent threatened damage, injury or loss. Additional compensation or extension of time claimed by the Contractor on account of an emergency shall be determined as provided in Article 15 and Article 7.

ARTICLE 11 INSURANCE AND BONDS

§ 11.1 CONTRACTOR'S LIABILITY INSURANCE

§ 11.1.1 The Contractor shall purchase from and maintain in a company or companies lawfully authorized to do business in the jurisdiction in which the Project is located such insurance as will protect the Contractor from claims set forth below which may arise out of or result from the Contractor's operations and completed operations under the Contract and for which the Contractor may be legally liable, whether such operations be by the Contractor or by a Subcontractor or by anyone directly or indirectly employed by any of them, or by anyone for whose acts any of them may be liable:

- **.1** Claims under workers' compensation, disability benefit and other similar employee benefit acts that are applicable to the Work to be performed;
- **.2** Claims for damages because of bodily injury, occupational sickness or disease, or death of the Contractor's employees;
- **.3** Claims for damages because of bodily injury, sickness or disease, or death of any person other than the Contractor's employees;
- **.4** Claims for damages insured by usual personal injury liability coverage;
- **.5** Claims for damages, other than to the Work itself, because of injury to or destruction of tangible property, including loss of use resulting therefrom;
- **.6** Claims for damages because of bodily injury, death of a person or property damage arising out of ownership, maintenance or use of a motor vehicle;
- **.7** Claims for bodily injury or property damage arising out of completed operations; and
- **.8** Claims involving contractual liability insurance applicable to the Contractor's obligations under Section 3.18.

§ 11.1.2 The insurance required by Section 11.1.1 shall be written for not less than limits of liability specified in the Contract Documents or required by law, whichever coverage is greater. Coverages, whether written on an occurrence or claims-made basis, shall be maintained without interruption from the date of commencement of the Work until the date of final payment and termination of any coverage required to be maintained after final payment, and, with respect to the Contractor's completed operations coverage, until the expiration of the period for correction of Work or for such other period for maintenance of completed operations coverage as specified in the Contract Documents.

§ 11.1.3 Certificates of insurance acceptable to the Owner shall be filed with the Owner 10 days prior to commencement of the Work and thereafter upon renewal or replacement of each required policy of insurance. These certificates and the insurance policies required by this Section 11.1 shall contain a provision that coverages afforded under the policies will not be canceled or allowed to expire until at least 30 days' prior written notice has been given to the Owner. An additional certificate evidencing continuation of liability coverage, including coverage for completed operations, shall be submitted with the final Application for Payment as required by Section 9.10.2 and thereafter upon renewal or replacement of such coverage until the expiration of the time required by Section 11.1.2. Information concerning reduction of coverage on account of revised limits or claims paid under the General Aggregate, or both, shall be furnished by the Contractor with reasonable promptness.

AIA Document A201™ – 2007. Copyright © 1911, 1915, 1918, 1925, 1937, 1951, 1958, 1961, 1963, 1966, 1970, 1976, 1987, 1997 and 2007 by The American Institute of Architects. **All rights reserved. WARNING: This AIA® Document is protected by U.S. Copyright Law and International Treaties. Unauthorized reproduction or distribution of this AIA® Document, or any portion of it, may result in severe civil and criminal penalties, and will be prosecuted to the maximum extent possible under the law.** This document was produced by AIA software at 08:39:36 on 11/21/2016 under Order No.7150521749_1 which expires on 10/03/2017, and is not for resale.
User Notes: (844049242)

Contractor shall carry and maintain in effect during the performance of services under this contract:

Comprehensive or Commercial General Liability insurance which shall include contractual, XCU, products and completed operations liability coverages. Bodily injury and property damage with combined single limits of not less than $1,000,000 per occurrence; and if written on an aggregate basis, $2,000,000 aggregate limit – include per project aggregate endorsement. The Owner must be named as an additional insured;

- Commerical Automobile Liability insurance endorsed for "any auto" with combined single limits of liability of not less than $1,000,000 each occurrence. The owner must be named as an additional insured;

- And Workers' Compensation insurance in compliance with the State of New Hampshire statutes, $100,000/$500,000/$100,000.

None of the requirements as to types and limits to be maintained by Contractor are intended to and shall not in any manner limit or qualify the liabilities and obligations assumed by Contractor under this contract. The Owqner shall not maintain any insurance on behalf of Contractor. Subcontractors are subject to the same insurance requirements as Contractor and it shall be the Contractor's responsibility to ensure compliance of this requirement.

The parties agree that Contractor shall have the status of and shall perform all work under this contract as an independent contractor, maintaining control over all its consultants, sub consultants, contractors, or subcontractors. The only contractual relationship created by this contract is between the Owner and Contractor, and nothing in this contract shall create any contractual relationship between the Owner and Contractor's consultants, sub consultants, contractors, or subcontractors. The parties also agree that Contractor is not the Owner's employee and that there shall be no:

(1) Withholding of income taxes by the Owner:
(2) Industrial insurance coverage provided by the Owner;
(3) Participation in group insurance plans which may be available to employees of the Owner;
(4) Participation or contributions by either the independent contractor or the Owner to the public employee's retirement system;
(5) Accumulation of vacation leave or sick leave provided by the Owner;
(6) Unemployment compensation coverage provided by the Owner.

- All deductibles and self-insured retentions shall be fully disclosed in the certificate(s) of insurance.
- If aggregate limits of less than $2,000,000 are imposed on bodily injury and property damage, Contractor must maintain umbrella liability insurance of at least $1,000,000. All aggregates must be fully disclosed on the required certificate of insurance.
- The specified insurance requirements do not relieve Contractor of its responsibilities or limit the amount of its liability to the Owner or other persons, and Contractor is encouraged to purchase such additional insurance, as it deems necessary.
- The insurance provided herein is primary, and no insurance held or owned by the Owner shall be called upon to contribute to a loss.

§ 11.1.4 The Contractor shall cause the commercial liability coverage required by the Contract Documents to include (1) the Owner, the Architect and the Architect's consultants as additional insureds for claims caused in whole or in part by the Contractor's negligent acts or omissions during the Contractor's operations; and (2) the Owner as an additional insured for claims caused in whole or in part by the Contractor's negligent acts or omissions during the Contractor's completed operations.

§ 11.2 OWNER'S LIABILITY INSURANCE

The Owner shall be responsible for purchasing and maintaining the Owner's usual liability insurance.

§ 11.3 PROPERTY INSURANCE

§ 11.3.1 Unless otherwise provided, the Contractor shall purchase and maintain, in a company or companies lawfully authorized to do business in the jurisdiction in which the Project is located, property insurance written on a builder's risk "all-risk" or equivalent policy form in the amount of the initial Contract Sum, plus value of subsequent

AIA Document A201™ – 2007. Copyright © 1911, 1915, 1918, 1925, 1937, 1951, 1958, 1961, 1963, 1966, 1970, 1976, 1987, 1997 and 2007 by The American Institute of Architects. **All rights reserved. WARNING: This AIA® Document is protected by U.S. Copyright Law and International Treaties. Unauthorized reproduction or distribution of this AIA® Document, or any portion of it, may result in severe civil and criminal penalties, and will be prosecuted to the maximum extent possible under the law.** This document was produced by AIA software at 08:39:36 on 11/21/2016 under Order No.7150521749_1 which expires on 10/03/2017, and is not for resale.
User Notes: (844049242)

Contract Modifications and cost of materials supplied or installed by others, comprising total value for the entire Project at the site on a replacement cost basis without optional deductibles. Such property insurance shall be maintained, unless otherwise provided in the Contract Documents or otherwise agreed in writing by all persons and entities who are beneficiaries of such insurance, until final payment has been made as provided in Section 9.10 or until no person or entity other than the Owner has an insurable interest in the property required by this Section 11.3 to be covered, whichever is later. This insurance shall include interests of the Owner, the Contractor, Subcontractors and Sub-subcontractors in the Project.

§ 11.3.1.1 Property insurance shall be on an "all-risk" or equivalent policy form and shall include, without limitation, insurance against the perils of fire (with extended coverage) and physical loss or damage including, without duplication of coverage, theft, vandalism, malicious mischief, collapse, earthquake, flood, windstorm, falsework, testing and startup, temporary buildings and debris removal including demolition occasioned by enforcement of any applicable legal requirements, and shall cover reasonable compensation for Architect's and Contractor's services and expenses required as a result of such insured loss.

(Paragraphs deleted)
§ 11.3.1.4 This property insurance shall cover portions of the Work stored off the site, and also portions of the Work in transit. The insurance shall include a permission to occupy endorsement.

§ 11.3.1.5 Partial occupancy or use in accordance with Section 9.9 shall not commence until the insurance company or companies providing property insurance have consented to such partial occupancy or use by endorsement or otherwise. The Owner and the Contractor shall take reasonable steps to obtain consent of the insurance company or companies and shall, without mutual written consent, take no action with respect to partial occupancy or use that would cause cancellation, lapse or reduction of insurance.

§ 11.3.2 BOILER AND MACHINERY INSURANCE (NOTE: Does the contract involve any new boilers, compressors or pressure vessels? If so, keep Risk in the loop)
The Owner shall purchase and maintain boiler and machinery insurance required by the Contract Documents or by law, which shall specifically cover such insured objects during installation and until final acceptance by the Owner; this insurance shall include interests of the Owner, Contractor, Subcontractors and Sub-subcontractors in the Work, and the Owner and Contractor shall be named insureds.

§ 11.3.3 LOSS OF USE INSURANCE
The Owner, at the Owner's option, may purchase and maintain such insurance as will insure the Owner against loss of use of the Owner's property due to fire or other hazards, however caused.

(Paragraphs deleted)
§ 11.3.6 Before an exposure to loss may occur, the Contractor shall file with the Owner a copy of each policy that includes insurance coverages required by this Section 11.3. Each policy shall contain all generally applicable conditions, definitions, exclusions and endorsements related to this Project. Each policy shall contain a provision that the policy will not be canceled or allowed to expire, and that its limits will not be reduced, until at least 30 days' prior written notice has been given to the Contractor.

(Paragraphs deleted)
§ 11.3.9 If required in writing by a party in interest, the Owner as fiduciary shall, upon occurrence of an insured loss, give bond for proper performance of the Owner's duties. The cost of required bonds shall be charged against proceeds received as fiduciary. The Owner shall deposit in a separate account proceeds so received, which the Owner shall distribute in accordance with such agreement as the parties in interest may reach, or as determined in accordance with the method of binding dispute resolution selected in the Agreement between the Owner and Contractor. If after such loss no other special agreement is made and unless the Owner terminates the Contract for convenience, replacement of damaged property shall be performed by the Contractor after notification of a Change in the Work in accordance with Article 7.

§ 11.3.10 The Owner as fiduciary shall have power to adjust and settle a loss with insurers.

AIA Document A201™ – 2007. Copyright © 1911, 1915, 1918, 1925, 1937, 1951, 1958, 1961, 1963, 1966, 1970, 1976, 1987, 1997 and 2007 by The American Institute of Architects. **All rights reserved. WARNING: This AIA® Document is protected by U.S. Copyright Law and International Treaties. Unauthorized reproduction or distribution of this AIA® Document, or any portion of it, may result in severe civil and criminal penalties, and will be prosecuted to the maximum extent possible under the law.** This document was produced by AIA software at 08:39:36 on 11/21/2016 under Order No.7150521749_1 which expires on 10/03/2017, and is not for resale.
User Notes: (844049242)

§ 11.4 PERFORMANCE BOND AND PAYMENT BOND

§ 11.4.1 The Owner shall have the right to require the Contractor to furnish bonds covering faithful performance of the Contract and payment of obligations arising thereunder as stipulated in bidding requirements or specifically required in the Contract Documents on the date of execution of the Contract.

§ 11.4.2 Upon the request of any person or entity appearing to be a potential beneficiary of bonds covering payment of obligations arising under the Contract, the Contractor shall promptly furnish a copy of the bonds or shall authorize a copy to be furnished.

ARTICLE 12 UNCOVERING AND CORRECTION OF WORK

§ 12.1 UNCOVERING OF WORK

§ 12.1.1 If a portion of the Work is covered contrary to the Architect's request or to requirements specifically expressed in the Contract Documents, it must, if requested in writing by the Architect, be uncovered for the Architect's examination and be replaced at the Contractor's expense without change in the Contract Time.

§ 12.1.2 If a portion of the Work has been covered that the Architect has not specifically requested to examine prior to its being covered, the Architect may request to see such Work and it shall be uncovered by the Contractor. If such Work is in accordance with the Contract Documents, costs of uncovering and replacement shall, by appropriate Change Order, be at the Owner's expense. If such Work is not in accordance with the Contract Documents, such costs and the cost of correction shall be at the Contractor's expense unless the condition was caused by the Owner or a separate contractor in which event the Owner shall be responsible for payment of such costs.

§ 12.2 CORRECTION OF WORK

§ 12.2.1 BEFORE OR AFTER SUBSTANTIAL COMPLETION

The Contractor shall promptly correct Work rejected by the Architect or failing to conform to the requirements of the Contract Documents, whether discovered before or after Substantial Completion and whether or not fabricated, installed or completed. Costs of correcting such rejected Work, including additional testing and inspections, the cost of uncovering and replacement, and compensation for the Architect's services and expenses made necessary thereby, shall be at the Contractor's expense.

§ 12.2.2 AFTER SUBSTANTIAL COMPLETION

§ 12.2.2.1 In addition to the Contractor's obligations under Section 3.5, if, within one year after the date of Substantial Completion of the Work or designated portion thereof or after the date for commencement of warranties established under Section 9.9.1, or by terms of an applicable special warranty required by the Contract Documents, any of the Work is found to be not in accordance with the requirements of the Contract Documents, the Contractor shall correct it promptly after receipt of written notice from the Owner to do so unless the Owner has previously given the Contractor a written acceptance of such condition. The Owner shall give such notice promptly after discovery of the condition. During the one-year period for correction of Work, if the Owner fails to notify the Contractor and give the Contractor an opportunity to make the correction, the Owner waives the rights to require correction by the Contractor. If the Contractor fails to correct nonconforming Work within a reasonable time during that period after receipt of notice from the Owner or Architect, the Owner may correct it in accordance with Section 2.4.

§ 12.2.2.2 The one-year period for correction of Work shall be extended with respect to portions of Work first performed after Substantial Completion by the period of time between Substantial Completion and the actual completion of that portion of the Work.

§ 12.2.2.3 The one-year period for correction of Work shall not be extended by corrective Work performed by the Contractor pursuant to this Section 12.2.

§ 12.2.3 The Contractor shall remove from the site portions of the Work that are not in accordance with the requirements of the Contract Documents and are neither corrected by the Contractor nor accepted by the Owner.

§ 12.2.4 The Contractor shall bear the cost of correcting destroyed or damaged construction, whether completed or partially completed, of the Owner or separate contractors caused by the Contractor's correction or removal of Work that is not in accordance with the requirements of the Contract Documents.

AIA Document A201™ – 2007. Copyright © 1911, 1915, 1918, 1925, 1937, 1951, 1958, 1961, 1963, 1966, 1970, 1976, 1987, 1997 and 2007 by The American Institute of Architects. **All rights reserved. WARNING: This AIA® Document is protected by U.S. Copyright Law and International Treaties. Unauthorized reproduction or distribution of this AIA® Document, or any portion of it, may result in severe civil and criminal penalties, and will be prosecuted to the maximum extent possible under the law.** This document was produced by AIA software at 08:39:36 on 11/21/2016 under Order No.7150521749_1 which expires on 10/03/2017, and is not for resale.
User Notes: (844049242)

§ 12.2.5 Nothing contained in this Section 12.2 shall be construed to establish a period of limitation with respect to other obligations the Contractor has under the Contract Documents. Establishment of the one-year period for correction of Work as described in Section 12.2.2 relates only to the specific obligation of the Contractor to correct the Work, and has no relationship to the time within which the obligation to comply with the Contract Documents may be sought to be enforced, nor to the time within which proceedings may be commenced to establish the Contractor's liability with respect to the Contractor's obligations other than specifically to correct the Work.

§ 12.3 ACCEPTANCE OF NONCONFORMING WORK

If the Owner prefers to accept Work that is not in accordance with the requirements of the Contract Documents, the Owner may do so instead of requiring its removal and correction, in which case the Contract Sum will be reduced as appropriate and equitable. Such adjustment shall be effected whether or not final payment has been made.

ARTICLE 13 MISCELLANEOUS PROVISIONS

§ 13.1 GOVERNING LAW

The Contract shall be governed by the law of the place where the Project is located . All disputes arising from or in connection with the Contract shall be brought in the State of New Hampshire, Superior Court Hillsborough South.

§ 13.2 SUCCESSORS AND ASSIGNS

§ 13.2.1 The Owner and Contractor respectively bind themselves, their partners, successors, assigns and legal representatives to covenants, agreements and obligations contained in the Contract Documents. Except as provided in Section 13.2.2, neither party to the Contract shall assign the Contract as a whole without written consent of the other. If either party attempts to make such an assignment without such consent, that party shall nevertheless remain legally responsible for all obligations under the Contract.

§ 13.2.2 The Owner may, without consent of the Contractor, assign the Contract to a lender providing construction financing for the Project, if the lender assumes the Owner's rights and obligations under the Contract Documents. The Contractor shall execute all consents reasonably required to facilitate such assignment.

§ 13.3 WRITTEN NOTICE

Written notice shall be deemed to have been duly served if delivered in person to the individual, to a member of the firm or entity, or to an officer of the corporation for which it was intended; or if delivered at, or sent by registered or certified mail or by courier service providing proof of delivery to, the last business address known to the party giving notice.

§ 13.4 RIGHTS AND REMEDIES

§ 13.4.1 Duties and obligations imposed by the Contract Documents and rights and remedies available thereunder shall be in addition to and not a limitation of duties, obligations, rights and remedies otherwise imposed or available by law.

§ 13.4.2 No action or failure to act by the Owner, Architect or Contractor shall constitute a waiver of a right or duty afforded them under the Contract, nor shall such action or failure to act constitute approval of or acquiescence in a breach there under, except as may be specifically agreed in writing.

§ 13.5 TESTS AND INSPECTIONS

§ 13.5.1 Tests, inspections and approvals of portions of the Work shall be made as required by the Contract Documents and by applicable laws, statutes, ordinances, codes, rules and regulations or lawful orders of public authorities. Unless otherwise provided, the Contractor shall make arrangements for such tests, inspections and approvals with an independent testing laboratory or entity acceptable to the Owner, or with the appropriate public authority, and shall bear all related costs of tests, inspections and approvals. The Contractor shall give the Architect timely notice of when and where tests and inspections are to be made so that the Architect may be present for such procedures. The Owner shall bear costs of (1) tests, inspections or approvals that do not become requirements until after bids are received or negotiations concluded, and (2) tests, inspections or approvals where building codes or applicable laws or regulations prohibit the Owner from delegating their cost to the Contractor.

§ 13.5.2 If the Architect, Owner or public authorities having jurisdiction determine that portions of the Work require additional testing, inspection or approval not included under Section 13.5.1, the Architect will, upon written

AIA Document A201™ – 2007. Copyright © 1911, 1915, 1918, 1925, 1937, 1951, 1958, 1961, 1963, 1966, 1970, 1976, 1987, 1997 and 2007 by The American Institute of Architects. **All rights reserved. WARNING: This AIA® Document is protected by U.S. Copyright Law and International Treaties. Unauthorized reproduction or distribution of this AIA® Document, or any portion of it, may result in severe civil and criminal penalties, and will be prosecuted to the maximum extent possible under the law.** This document was produced by AIA software at 08:39:36 on 11/21/2016 under Order No.7150521749_1 which expires on 10/03/2017, and is not for resale.
User Notes: (844049242)

authorization from the Owner, instruct the Contractor to make arrangements for such additional testing, inspection or approval by an entity acceptable to the Owner, and the Contractor shall give timely notice to the Architect of when and where tests and inspections are to be made so that the Architect may be present for such procedures. Such costs, except as provided in Section 13.5.3, shall be at the Owner's expense.

§ 13.5.3 If such procedures for testing, inspection or approval under Sections 13.5.1 and 13.5.2 reveal failure of the portions of the Work to comply with requirements established by the Contract Documents, all costs made necessary by such failure including those of repeated procedures and compensation for the Architect's services and expenses shall be at the Contractor's expense.

§ 13.5.4 Required certificates of testing, inspection or approval shall, unless otherwise required by the Contract Documents, be secured by the Contractor and promptly delivered to the Architect.

§ 13.5.5 If the Architect is to observe tests, inspections or approvals required by the Contract Documents, the Architect will do so promptly and, where practicable, at the normal place of testing.

§ 13.5.6 Tests or inspections conducted pursuant to the Contract Documents shall be made promptly to avoid unreasonable delay in the Work.

§ 13.6 INTEREST

Intentionally omitted.

(Paragraphs deleted)

ARTICLE 14 TERMINATION OR SUSPENSION OF THE CONTRACT

§ 14.1 TERMINATION BY THE CONTRACTOR

§ 14.1. § 14.1.1 The Contractor may terminate the Contract if the Work is stopped for a period of 60 consecutive days through no act or fault of the Contractor or a Subcontractor, Sub-subcontractor or their agents or employees or any other persons or entities performing portions of the Work under direct or indirect contract with the Contractor, for any of the following reasons:

- **.1** Issuance of an order of a court or other public authority having jurisdiction that requires all Work to be stopped;
- **.2** An act of government, such as a declaration of national emergency that requires all Work to be stopped;
- **.3** Because the Architect has not issued a Certificate for Payment and has not notified the Contractor of the reason for withholding certification as provided in Section 9.4.1, or because the Owner has not made payment on a Certificate for Payment within the time stated in the Contract Documents; or
- **.4** The Owner has failed to furnish to the Contractor promptly, upon the Contractor's request, reasonable evidence as required by Section 2.2.1.

§ 14.1.2 The Contractor may terminate the Contract if, through no act or fault of the Contractor or a Subcontractor, Sub-subcontractor or their agents or employees or any other persons or entities performing portions of the Work under direct or indirect contract with the Contractor, repeated suspensions, delays or interruptions of the entire Work by the Owner as described in Section 14.3 constitute in the aggregate more than 100 percent of the total number of days scheduled for completion, or 120 days in any 365-day period, whichever is less.

§ 14.1.3 If one of the reasons described in Section 14.1.1 or 14.1.2 exists, the Contractor may, upon seven days' written notice to the Owner and Architect, terminate the Contract and recover from the Owner payment for Work executed, including reasonable overhead and profit, costs incurred by reason of such termination, and damages.

§ 14.1.4 If the Work is stopped for a period of 60 consecutive days through no act or fault of the Contractor or a Subcontractor or their agents or employees or any other persons performing portions of the Work under contract with the Contractor because the Owner has repeatedly failed to fulfill the Owner's obligations under the Contract Documents with respect to matters important to the progress of the Work, the Contractor may, upon seven additional days' written notice to the Owner and the Architect, terminate the Contract and recover from the Owner as provided in Section 14.1.3.

AIA Document A201™ – 2007. Copyright © 1911, 1915, 1918, 1925, 1937, 1951, 1958, 1961, 1963, 1966, 1970, 1976, 1987, 1997 and 2007 by The American Institute of Architects. **All rights reserved. WARNING: This AIA® Document is protected by U.S. Copyright Law and International Treaties. Unauthorized reproduction or distribution of this AIA® Document, or any portion of it, may result in severe civil and criminal penalties, and will be prosecuted to the maximum extent possible under the law.** This document was produced by AIA software at 08:39:36 on 11/21/2016 under Order No.7150521749_1 which expires on 10/03/2017, and is not for resale.
User Notes: (844049242)

§ 14.2 TERMINATION BY THE OWNER FOR CAUSE

§ 14.2.1 The Owner may terminate the Contract if the Contractor

- **.1** repeatedly refuses or fails to supply enough properly skilled workers or proper materials;
- **.2** fails to make payment to Subcontractors for materials or labor in accordance with the respective agreements between the Contractor and the Subcontractors;
- **.3** repeatedly disregards applicable laws, statutes, ordinances, codes, rules and regulations, or lawful orders of a public authority; or
- **.4** otherwise is guilty of substantial breach of a provision of the Contract Documents.

§ 14.2.2 When any of the above reasons exist, the Owner, upon certification by the Initial Decision Maker that sufficient cause exists to justify such action, may without prejudice to any other rights or remedies of the Owner and after giving the Contractor and the Contractor's surety, if any, seven days' written notice, terminate employment of the Contractor and may, subject to any prior rights of the surety:

- **.1** Exclude the Contractor from the site and take possession of all materials, equipment, tools, and construction equipment and machinery thereon owned by the Contractor;
- **.2** Accept assignment of subcontracts pursuant to Section 5.4; and
- **.3** Finish the Work by whatever reasonable method the Owner may deem expedient. Upon written request of the Contractor, the Owner shall furnish to the Contractor a detailed accounting of the costs incurred by the Owner in finishing the Work.

§ 14.2.3 When the Owner terminates the Contract for one of the reasons stated in Section 14.2.1, the Contractor shall not be entitled to receive further payment until the Work is finished.

§ 14.2.4 If the unpaid balance of the Contract Sum exceeds costs of finishing the Work, including compensation for the Architect's services and expenses made necessary thereby, and other damages incurred by the Owner and not expressly waived, such excess shall be paid to the Contractor. If such costs and damages exceed the unpaid balance, the Contractor shall pay the difference to the Owner. The amount to be paid to the Contractor or Owner, as the case may be, shall be certified by the Initial Decision Maker, upon application, and this obligation for payment shall survive termination of the Contract.

§ 14.3 SUSPENSION BY THE OWNER FOR CONVENIENCE

§ 14.3.1 The Owner may, without cause, order the Contractor in writing to suspend, delay or interrupt the Work in whole or in part for such period of time as the Owner may determine.

§ 14.3.2 The Contract Sum and Contract Time may be adjusted for increases in the cost and time caused by suspension, delay or interruption as described in Section 14.3.1. Adjustment of the Contract Sum may include profit. No adjustment shall be made to the extent

- **.1** that performance is, was or would have been so suspended, delayed or interrupted by another cause for which the Contractor is responsible; or
- **.2** that an equitable adjustment is made or denied under another provision of the Contract.

§ 14.4 TERMINATION BY THE OWNER FOR CONVENIENCE

§ 14.4.1 The Owner may, at any time, terminate the Contract for the Owner's convenience and without cause.

§ 14.4.2 Upon receipt of written notice from the Owner of such termination for the Owner's convenience, the Contractor shall

- **.1** cease operations as directed by the Owner in the notice;
- **.2** take actions necessary, or that the Owner may direct, for the protection and preservation of the Work; and
- **.3** except for Work directed to be performed prior to the effective date of termination stated in the notice, terminate all existing subcontracts and purchase orders and enter into no further subcontracts and purchase orders.
- **.4** assist Owner in the orderly transition of the Work to another contractor of the Owner's choosing or to the Owner in the Owner's sole discretion.

§ 14.4.3 In case of such termination for the Owner's convenience, the Contractor shall be entitled to receive payment for Work executed, and costs incurred by reason of such termination on the Work not executed.

AIA Document A201™ – 2007. Copyright © 1911, 1915, 1918, 1925, 1937, 1951, 1958, 1961, 1963, 1966, 1970, 1976, 1987, 1997 and 2007 by The American Institute of Architects. **All rights reserved. WARNING: This AIA® Document is protected by U.S. Copyright Law and International Treaties. Unauthorized reproduction or distribution of this AIA® Document, or any portion of it, may result in severe civil and criminal penalties, and will be prosecuted to the maximum extent possible under the law.** This document was produced by AIA software at 08:39:36 on 11/21/2016 under Order No.7150521749_1 which expires on 10/03/2017, and is not for resale.
User Notes: (844049242)

ARTICLE 15 CLAIMS AND DISPUTES

§ 15.1 CLAIMS

§ 15.1.1 DEFINITION

A Claim is a demand or assertion by one of the parties seeking, as a matter of right, payment of money, or other relief with respect to the terms of the Contract. The term "Claim" also includes other disputes and matters in question between the Owner and Contractor arising out of or relating to the Contract. The responsibility to substantiate Claims shall rest with the party making the Claim.

§ 15.1.2 NOTICE OF CLAIMS

Claims by either the Owner or Contractor must be initiated by written notice to the other party and to the Initial Decision Maker with a copy sent to the Architect, if the Architect is not serving as the Initial Decision Maker.

§ 15.1.3 CONTINUING CONTRACT PERFORMANCE

Pending final resolution of a Claim, except as otherwise agreed in writing or as provided in Section 9.7 and Article 14, the Contractor shall proceed diligently with performance of the Contract and the Owner shall continue to make payments in accordance with the Contract Documents. The Architect will prepare Change Orders and issue Certificates for Payment in accordance with the decisions of the Initial Decision Maker.

§ 15.1.4 CLAIMS FOR ADDITIONAL COST

If the Contractor wishes to make a Claim for an increase in the Contract Sum, written notice as provided herein shall be given before proceeding to execute the Work. Prior notice is not required for Claims relating to an emergency endangering life or property arising under Section 10.4.

§ 15.1.5 CLAIMS FOR ADDITIONAL TIME

§ 15.1.5.1 If the Contractor wishes to make a Claim for an increase in the Contract Time, written notice as provided herein shall be given. The Contractor's Claim shall include an estimate of cost and of probable effect of delay on progress of the Work. In the case of a continuing delay, only one Claim is necessary.

§ 15.1.5.2 If adverse weather conditions are the basis for a Claim for additional time, such Claim shall be documented by data substantiating that weather conditions were abnormal for the period of time, could not have been reasonably anticipated and had an adverse effect on the scheduled construction.

§ 15.1.6 CLAIMS FOR CONSEQUENTIAL DAMAGES

The Contractor and Owner waive Claims against each other for consequential damages arising out of or relating to this Contract. This mutual waiver includes

- **.1** damages incurred by the Owner for rental expenses, for losses of use, income, profit, financing, business and reputation, and for loss of management or employee productivity or of the services of such persons; and
- **.2** damages incurred by the Contractor for principal office expenses including the compensation of personnel stationed there, for losses of financing, business and reputation, and for loss of profit except anticipated profit arising directly from the Work.

This mutual waiver is applicable, without limitation, to all consequential damages due to either party's termination in accordance with Article 14. Nothing contained in this Section 15.1.6 shall be deemed to preclude an award of liquidated damages, when applicable, in accordance with the requirements of the Contract Documents.

(Paragraphs deleted)

§ 15.2.7 In the event of a Claim against the Contractor, the Owner may, but is not obligated to, notify the surety, if any, of the nature and amount of the Claim. If the Claim relates to a possibility of a Contractor's default, the Owner may, but is not obligated to, notify the surety and request the surety's assistance in resolving the controversy.

§ 15.2.8 If a Claim relates to or is the subject of a mechanic's lien, the party asserting such Claim may proceed in accordance with applicable law to comply with the lien notice or filing deadlines.

AIA Document A201™ – 2007. Copyright © 1911, 1915, 1918, 1925, 1937, 1951, 1958, 1961, 1963, 1966, 1970, 1976, 1987, 1997 and 2007 by The American Institute of Architects. **All rights reserved. WARNING: This AIA® Document is protected by U.S. Copyright Law and International Treaties. Unauthorized reproduction or distribution of this AIA® Document, or any portion of it, may result in severe civil and criminal penalties, and will be prosecuted to the maximum extent possible under the law.** This document was produced by AIA software at 08:39:36 on 11/21/2016 under Order No.7150521749_1 which expires on 10/03/2017, and is not for resale.
User Notes: (844049242)

§ 15.3 MEDIATION

§ 15.3.1 Claims, disputes, or other matters in controversy arising out of or related to the Contract except those waived as provided for in Sections 9.10.4, 9.10.5, and 15.1.6 may be subject to mediation .

§ 15.3.2 The parties may endeavor to resolve their Claims by mediation . A request for mediation shall be made in writing, delivered to the other party to the Contract, and filed with the person or entity administering the mediation.

§ 15.3.3 The parties shall share the mediator's fee and any filing fees equally. The mediation shall be held in the place where the Project is located, unless another location is mutually agreed upon. Agreements reached in mediation shall be enforceable as settlement agreements in any court having jurisdiction thereof.

§ 15.4 ARBITRATION

§ 15.4.1 Intentionally omitted.

§ 15.4.1.1 Intentionally omitted.

§ 15.4.2 Intentionally omitted.

§ 15.4.3 Intentionally omitted.

§ 15.4.4 CONSOLIDATION OR JOINDER Intentionally omitted.

(Paragraphs deleted)

AIA Document A201™ – 2007. Copyright © 1911, 1915, 1918, 1925, 1937, 1951, 1958, 1961, 1963, 1966, 1970, 1976, 1987, 1997 and 2007 by The American Institute of Architects. **All rights reserved. WARNING: This AIA® Document is protected by U.S. Copyright Law and International Treaties. Unauthorized reproduction or distribution of this AIA® Document, or any portion of it, may result in severe civil and criminal penalties, and will be prosecuted to the maximum extent possible under the law.** This document was produced by AIA software at 08:39:36 on 11/21/2016 under Order No.7150521749_1 which expires on 10/03/2017, and is not for resale.

User Notes: (844049242)

Additions and Deletions Report for
AIA® Document A201™ – 2007

This Additions and Deletions Report, as defined on page 1 of the associated document, reproduces below all text the author has added to the standard form AIA document in order to complete it, as well as any text the author may have added to or deleted from the original AIA text. Added text is shown underlined. Deleted text is indicated with a horizontal line through the original AIA text.

Note: This Additions and Deletions Report is provided for information purposes only and is not incorporated into or constitute any part of the associated AIA document. This Additions and Deletions Report and its associated document were generated simultaneously by AIA software at 08:39:36 on 11/21/2016.

PAGE 1

Nashua Fire Station # 3- Spit Brook Road

...

(Name, legal status and address)
City Of Nashua
229 Main Street
Nashua, NH 03060

...

Port One Architects
959 Islington Street
Portsmouth, NH 03801

PAGE 10

The Contract Documents are enumerated in the Agreement between the Owner and Contractor (hereinafter the Agreement) and consist of the Agreement, Conditions of the Contract (General, Supplementary and other Conditions), Drawings, Specifications, Addenda issued prior to execution of the Contract, other documents listed in the Agreement and Modifications issued after execution of the Contract. A Modification is (1) a written amendment to the Contract signed by both parties, (2) a Change Order, (3) a Construction Change Directive or (4) a written order for a minor change in the Work issued by the ~~Architect.~~ Architect and agreed to in writing by the Owner. Unless specifically enumerated in the Agreement, the Contract Documents ~~do not~~ include the advertisement or invitation to bid, Instructions to Bidders, sample forms, other information furnished by the Owner in anticipation of receiving bids or proposals, the Contractor's bid or proposal, or portions of Addenda relating to bidding requirements.

...

The Contract Documents form the Contract for Construction. The Contract represents the entire and integrated agreement between the parties hereto and supersedes prior negotiations, representations or agreements, either written or oral. The Contract may be amended or modified only by a Modification. The Contract Documents shall not be construed to create a contractual relationship of any kind (1) between the Contractor and the Architect or the Architect's consultants, (2) between the Owner and a Subcontractor or a Sub-subcontractor, (3) between the Owner and the ~~Architect or the~~ Architect's consultants or (4) between any persons or entities other than the Owner and the Contractor. The Architect shall, however, be entitled to performance and enforcement of obligations under the Contract intended to facilitate performance of the Architect's duties.

PAGE 11

Additions and Deletions Report for AIA Document A201™ – 2007. Copyright © 1911, 1915, 1918, 1925, 1937, 1951, 1958, 1961, 1963, 1966, 1970, 1976, 1987, 1997 and 2007 by The American Institute of Architects. **All rights reserved. WARNING: This AIA® Document is protected by U.S. Copyright Law and International Treaties. Unauthorized reproduction or distribution of this AIA® Document, or any portion of it, may result in severe civil and criminal penalties, and will be prosecuted to the maximum extent possible under the law.** This document was produced by AIA software at 08:39:36 on 11/21/2016 under Order No.7150521749_1 which expires on 10/03/2017, and is not for resale.
User Notes: (844049242)

§ 1.5.1 The Architect and the Architect's consultants shall be deemed the authors ~~and owners~~ of their respective Instruments of Service, including the Drawings and ~~Specifications, and will retain all common law, statutory and other reserved rights, including copyrights.~~ Specifications,. The Contractor, Subcontractors, Sub-subcontractors, and material or equipment suppliers shall not own or claim a copyright in the Instruments of Service. Submittal or distribution to meet official regulatory requirements or for other purposes in connection with this Project is not to be construed as publication in derogation of the Architect's or Architect's consultants' reserved rights.

...

§ 2.1.2 The Owner shall furnish to the Contractor within ~~fifteen~~ thirty days after receipt of a written request, information necessary and relevant for the Contractor to evaluate, give notice of or enforce mechanic's lien rights. Such information shall include a correct statement of the record legal title to the property on which the Project is located, usually referred to as the site, and the Owner's interest therein.

PAGE 12

If the Contractor defaults or neglects to carry out the Work in accordance with the Contract Documents and fails within a ten-day period after receipt of written notice from the Owner to commence and continue correction of such default or neglect with diligence and promptness, the Owner may, without prejudice to other remedies the Owner may have, correct such deficiencies. In such case an appropriate Change Order shall be issued deducting from payments then or thereafter due the Contractor the reasonable cost of correcting such deficiencies, including Owner's expenses and compensation for the Architect's additional services made necessary by such default, neglect or failure. ~~Such action by the Owner and amounts charged to the Contractor are both subject to prior approval of the Architect.~~ If payments then or thereafter due the Contractor are not sufficient to cover such amounts, the Contractor shall promptly pay the difference to the Owner.

PAGE 13

§ 3.3.1 The Contractor shall supervise and direct the Work, using the Contractor's best skill and attention. The Contractor shall be solely responsible for, and have control over, construction means, methods, techniques, sequences and procedures and for coordinating all portions of the Work under the Contract, unless the Contract Documents give other specific instructions concerning these matters. If the Contract Documents give specific instructions concerning construction means, methods, techniques, sequences or procedures, the Contractor shall evaluate the jobsite safety thereof and, except as stated below, shall be fully and solely responsible for the jobsite safety of such means, methods, techniques, sequences or procedures. If the Contractor determines that such means, methods, techniques, sequences or procedures may not be safe, the Contractor shall give timely written notice to the Owner and Architect and shall not proceed with that portion of the Work without further written instructions from the Architect.~~If the Contractor is then instructed to proceed with the required means, methods, techniques, sequences or procedures without acceptance of changes proposed by the Contractor, the Owner shall be solely responsible for any loss or damage arising solely from those Owner-required means, methods, techniques, sequences or procedures.~~

PAGE 26

~~If the Architect does not issue a Certificate for Payment, through no fault of the Contractor, within seven days after receipt of the Contractor's Application for Payment, or if the Owner does not pay the Contractor within seven days after the date established in the Contract Documents the amount certified by the Architect or awarded by binding dispute resolution, then the Contractor may, upon seven additional days' written notice to the Owner and Architect, stop the Work until payment of the amount owing has been received. The Contract Time shall be extended appropriately and the Contract Sum shall be increased by the amount of the Contractor's reasonable costs of shut-down, delay and start-up, plus interest as provided for in the Contract Documents.~~
Intentionally Omitted.

PAGE 28

~~**§ 9.10.4** The making of final payment shall constitute a waiver of Claims by the Owner except those arising from~~
~~.1 liens, Claims, security interests or encumbrances arising out of the Contract and unsettled;~~
~~.2 failure of the Work to comply with the requirements of the Contract Documents; or~~

Additions and Deletions Report for AIA Document A201™ – 2007. Copyright © 1911, 1915, 1918, 1925, 1937, 1951, 1958, 1961, 1963, 1966, 1970, 1976, 1987, 1997 and 2007 by The American Institute of Architects. **All rights reserved. WARNING: This AIA® Document is protected by U.S. Copyright Law and International Treaties. Unauthorized reproduction or distribution of this AIA® Document, or any portion of it, may result in severe civil and criminal penalties, and will be prosecuted to the maximum extent possible under the law.** This document was produced by AIA software at 08:39:36 on 11/21/2016 under Order No.7150521749_1 which expires on 10/03/2017, and is not for resale.
User Notes: (844049242)

~~.3 terms of special warranties required by the Contract Documents.~~

PAGE 29

10.2.7.1 It is the Contractor's responsibility to initiate and maintain safety training and compliance programs that meet or exceed OSHA standards and all applicable Federal, State and local safety health and environmental regulations. The Owner maintains the right to inspect the work site to determine if conditions exist that could reasonably be expected to cause death, serious physical harm or will compromise the safety and health of the Owner; including visitors and contractor's employees and sub-employees. If such conditions exist, the Owner has the right to suspend work if deemed unsafe.

If either party suffers injury or damage to person or property because of an act or omission of the other party, or of others for whose acts such party is legally responsible, written notice of such injury or damage, whether or not insured, shall be given to the other party within a reasonable time ~~not exceeding 21 days~~ after discovery. The notice shall provide sufficient detail to enable the other party to investigate the matter.

PAGE 30

§ 11.1.3 Certificates of insurance acceptable to the Owner shall be filed with the Owner 10 days prior to commencement of the Work and thereafter upon renewal or replacement of each required policy of insurance. These certificates and the insurance policies required by this Section 11.1 shall contain a provision that coverages afforded under the policies will not be canceled or allowed to expire until at least 30 days' prior written notice has been given to the Owner. An additional certificate evidencing continuation of liability coverage, including coverage for completed operations, shall be submitted with the final Application for Payment as required by Section 9.10.2 and thereafter upon renewal or replacement of such coverage until the expiration of the time required by Section 11.1.2. Information concerning reduction of coverage on account of revised limits or claims paid under the General Aggregate, or both, shall be furnished by the Contractor with reasonable promptness.

Contractor shall carry and maintain in effect during the performance of services under this contract:

Comprehensive or Commercial General Liability insurance which shall include contractual, XCU, products and completed operations liability coverages. Bodily injury and property damage with combined single limits of not less than $1,000,000 per occurrence; and if written on an aggregate basis, $2,000,000 aggregate limit – include per project aggregate endorsement. The Owner must be named as an additional insured;

- Commerical Automobile Liability insurance endorsed for "any auto" with combined single limits of liability of not less than $1,000,000 each occurrence. The owner must be named as an additional insured;
- And Workers' Compensation insurance in compliance with the State of New Hampshire statutes, $100,000/$500,000/$100,000.

None of the requirements as to types and limits to be maintained by Contractor are intended to and shall not in any manner limit or qualify the liabilities and obligations assumed by Contractor under this contract. The Owqner shall not maintain any insurance on behalf of Contractor. Subcontractors are subject to the same insurance requirements as Contractor and it shall be the Contractor's responsibility to ensure compliance of this requirement.

The parties agree that Contractor shall have the status of and shall perform all work under this contract as an independent contractor, maintaining control over all its consultants, sub consultants, contractors, or subcontractors. The only contractual relationship created by this contract is between the Owner and Contractor, and nothing in this contract shall create any contractual relationship between the Owner and Contractor's consultants, sub consultants, contractors, or subcontractors. The parties also agree that Contractor is not the Owner's employee and that there shall be no:

(1) Withholding of income taxes by the Owner:

Additions and Deletions Report for AIA Document A201™ – 2007. Copyright © 1911, 1915, 1918, 1925, 1937, 1951, 1958, 1961, 1963, 1966, 1970, 1976, 1987, 1997 and 2007 by The American Institute of Architects. **All rights reserved. WARNING: This AIA® Document is protected by U.S. Copyright Law and International Treaties. Unauthorized reproduction or distribution of this AIA® Document, or any portion of it, may result in severe civil and criminal penalties, and will be prosecuted to the maximum extent possible under the law.** This document was produced by AIA software at 08:39:36 on 11/21/2016 under Order No.7150521749_1 which expires on 10/03/2017, and is not for resale.
User Notes: (844049242)

(2) Industrial insurance coverage provided by the Owner;
(3) Participation in group insurance plans which may be available to employees of the Owner;
(4) Participation or contributions by either the independent contractor or the Owner to the public employee's retirement system;
(5) Accumulation of vacation leave or sick leave provided by the Owner;
(6) Unemployment compensation coverage provided by the Owner.

- All deductibles and self-insured retentions shall be fully disclosed in the certificate(s) of insurance.
- If aggregate limits of less than $2,000,000 are imposed on bodily injury and property damage, Contractor must maintain umbrella liability insurance of at least $1,000,000. All aggregates must be fully disclosed on the required certificate of insurance.
- The specified insurance requirements do not relieve Contractor of its responsibilities or limit the amount of its liability to the Owner or other persons, and Contractor is encouraged to purchase such additional insurance, as it deems necessary.
- The insurance provided herein is primary, and no insurance held or owned by the Owner shall be called upon to contribute to a loss.

PAGE 31

§ 11.3.1 Unless otherwise provided, the ~~Owner~~ Contractor shall purchase and maintain, in a company or companies lawfully authorized to do business in the jurisdiction in which the Project is located, property insurance written on a builder's risk "all-risk" or equivalent policy form in the amount of the initial Contract Sum, plus value of subsequent Contract Modifications and cost of materials supplied or installed by others, comprising total value for the entire Project at the site on a replacement cost basis without optional deductibles. Such property insurance shall be maintained, unless otherwise provided in the Contract Documents or otherwise agreed in writing by all persons and entities who are beneficiaries of such insurance, until final payment has been made as provided in Section 9.10 or until no person or entity other than the Owner has an insurable interest in the property required by this Section 11.3 to be covered, whichever is later. This insurance shall include interests of the Owner, the Contractor, Subcontractors and Sub-subcontractors in the Project.

PAGE 32

~~**§ 11.3.1.2** If the Owner does not intend to purchase such property insurance required by the Contract and with all of the coverages in the amount described above, the Owner shall so inform the Contractor in writing prior to commencement of the Work. The Contractor may then effect insurance that will protect the interests of the Contractor, Subcontractors and Sub-subcontractors in the Work, and by appropriate Change Order the cost thereof shall be charged to the Owner. If the Contractor is damaged by the failure or neglect of the Owner to purchase or maintain insurance as described above, without so notifying the Contractor in writing, then the Owner shall bear all reasonable costs properly attributable thereto.~~

~~**§ 11.3.1.3** If the property insurance requires deductibles, the Owner shall pay costs not covered because of such deductibles.~~

§ 11.3.1.4 This property insurance shall cover portions of the Work stored off the site, and also portions of the Work in transit. The insurance shall include a permission to occupy endorsement.

...

§ 11.3.2 BOILER AND MACHINERY INSURANCE (NOTE: Does the contract involve any new boilers, compressors or pressure vessels? If so, keep Risk in the loop)

...

The Owner, at the Owner's option, may purchase and maintain such insurance as will insure the Owner against loss of use of the Owner's property due to fire or other hazards, however caused.~~The Owner waives all rights of action against the Contractor for loss of use of the Owner's property, including consequential losses due to fire or other hazards however caused.~~

Additions and Deletions Report for AIA Document A201™ – 2007. Copyright © 1911, 1915, 1918, 1925, 1937, 1951, 1958, 1961, 1963, 1966, 1970, 1976, 1987, 1997 and 2007 by The American Institute of Architects. **All rights reserved. WARNING: This AIA® Document is protected by U.S. Copyright Law and International Treaties. Unauthorized reproduction or distribution of this AIA® Document, or any portion of it, may result in severe civil and criminal penalties, and will be prosecuted to the maximum extent possible under the law.** This document was produced by AIA software at 08:39:36 on 11/21/2016 under Order No.7150521749_1 which expires on 10/03/2017, and is not for resale.
User Notes: (844049242)

~~**§ 11.3.4** If the Contractor requests in writing that insurance for risks other than those described herein or other special causes of loss be included in the property insurance policy, the Owner shall, if possible, include such insurance, and the cost thereof shall be charged to the Contractor by appropriate Change Order.~~

~~**§ 11.3.5** If during the Project construction period the Owner insures properties, real or personal or both, at or adjacent to the site by property insurance under policies separate from those insuring the Project, or if after final payment property insurance is to be provided on the completed Project through a policy or policies other than those insuring the Project during the construction period, the Owner shall waive all rights in accordance with the terms of Section 11.3.7 for damages caused by fire or other causes of loss covered by this separate property insurance. All separate policies shall provide this waiver of subrogation by endorsement or otherwise.~~

§ 11.3.6 Before an exposure to loss may occur, the ~~Owner~~ Contractor shall file with the ~~Contractor~~ Owner a copy of each policy that includes insurance coverages required by this Section 11.3. Each policy shall contain all generally applicable conditions, definitions, exclusions and endorsements related to this Project. Each policy shall contain a provision that the policy will not be canceled or allowed to expire, and that its limits will not be reduced, until at least 30 days' prior written notice has been given to the Contractor.

~~**§ 11.3.7 WAIVERS OF SUBROGATION**~~
~~The Owner and Contractor waive all rights against (1) each other and any of their subcontractors, sub-subcontractors, agents and employees, each of the other, and (2) the Architect, Architect's consultants, separate contractors described in Article 6, if any, and any of their subcontractors, sub-subcontractors, agents and employees, for damages caused by fire or other causes of loss to the extent covered by property insurance obtained pursuant to this Section 11.3 or other property insurance applicable to the Work, except such rights as they have to proceeds of such insurance held by the Owner as fiduciary. The Owner or Contractor, as appropriate, shall require of the Architect, Architect's consultants, separate contractors described in Article 6, if any, and the subcontractors, sub-subcontractors, agents and employees of any of them, by appropriate agreements, written where legally required for validity, similar waivers each in favor of other parties enumerated herein. The policies shall provide such waivers of subrogation by endorsement or otherwise. A waiver of subrogation shall be effective as to a person or entity even though that person or entity would otherwise have a duty of indemnification, contractual or otherwise, did not pay the insurance premium directly or indirectly, and whether or not the person or entity had an insurable interest in the property damaged.~~

~~**§ 11.3.8** A loss insured under the Owner's property insurance shall be adjusted by the Owner as fiduciary and made payable to the Owner as fiduciary for the insureds, as their interests may appear, subject to requirements of any applicable mortgagee clause and of Section 11.3.10. The Contractor shall pay Subcontractors their just shares of insurance proceeds received by the Contractor, and by appropriate agreements, written where legally required for validity, shall require Subcontractors to make payments to their Sub-subcontractors in similar manner.~~

§ 11.3.10 The Owner as fiduciary shall have power to adjust and settle a loss with ~~insurers unless one of the parties in interest shall object in writing within five days after occurrence of loss to the Owner's exercise of this power; if such objection is made, the dispute shall be resolved in the manner selected by the Owner and Contractor as the method of binding dispute resolution in the Agreement. If the Owner and Contractor have selected arbitration as the method of binding dispute resolution, the Owner as fiduciary shall make settlement with insurers or, in the case of a dispute over distribution of insurance proceeds, in accordance with the directions of the arbitrators.~~ insurers.

PAGE 33

§ 12.2.2.1 In addition to the Contractor's obligations under Section 3.5, if, within one year after the date of Substantial Completion of the Work or designated portion thereof or after the date for commencement of warranties established under Section 9.9.1, or by terms of an applicable special warranty required by the Contract Documents, any of the Work is found to be not in accordance with the requirements of the Contract Documents, the Contractor shall correct it promptly after receipt of written notice from the Owner to do so unless the Owner has previously given the Contractor a written acceptance of such condition. The Owner shall give such notice promptly after discovery of the condition. During the one-year period for correction of Work, if the Owner fails to notify the

Additions and Deletions Report for AIA Document A201™ – 2007. Copyright © 1911, 1915, 1918, 1925, 1937, 1951, 1958, 1961, 1963, 1966, 1970, 1976, 1987, 1997 and 2007 by The American Institute of Architects. **All rights reserved. WARNING: This AIA® Document is protected by U.S. Copyright Law and International Treaties. Unauthorized reproduction or distribution of this AIA® Document, or any portion of it, may result in severe civil and criminal penalties, and will be prosecuted to the maximum extent possible under the law.** This document was produced by AIA software at 08:39:36 on 11/21/2016 under Order No.7150521749_1 which expires on 10/03/2017, and is not for resale.
User Notes: (844049242)

Contractor and give the Contractor an opportunity to make the correction, the Owner waives the rights to require correction by the ~~Contractor and to make a claim for breach of warranty.~~ Contractor. If the Contractor fails to correct nonconforming Work within a reasonable time during that period after receipt of notice from the Owner or Architect, the Owner may correct it in accordance with Section 2.4.

PAGE 34

The Contract shall be governed by the law of the place where the Project is located ~~except that, if the parties have selected arbitration as the method of binding dispute resolution, the Federal Arbitration Act shall govern Section 15.4.~~. All disputes arising from or in connection with the Contract shall be brought in the State of New Hampshire, Superior Court Hillsborough South.

PAGE 35

~~Payments due and unpaid under the Contract Documents shall bear interest from the date payment is due at such rate as the parties may agree upon in writing or, in the absence thereof, at the legal rate prevailing from time to time at the place where the Project is located.~~Intentionally omitted.

~~**§ 13.7 TIME LIMITS ON CLAIMS**~~
~~The Owner and Contractor shall commence all claims and causes of action, whether in contract, tort, breach of warranty or otherwise, against the other arising out of or related to the Contract in accordance with the requirements of the final dispute resolution method selected in the Agreement within the time period specified by applicable law, but in any case not more than 10 years after the date of Substantial Completion of the Work. The Owner and Contractor waive all claims and causes of action not commenced in accordance with this Section 13.7.~~

...

§ 14.1. ~~§ 14.1.1~~ ~~The Contractor may terminate the Contract if the Work is stopped for a period of 30 consecutive days through no act or fault of the Contractor or a Subcontractor, Sub-subcontractor or their agents or employees or any other persons or entities performing portions of the Work under direct or indirect contract with the Contractor, for any of the following reasons:~~**§ 14.1.1** The Contractor may terminate the Contract if the Work is stopped for a period of 60 consecutive days through no act or fault of the Contractor or a Subcontractor, Sub-subcontractor or their agents or employees or any other persons or entities performing portions of the Work under direct or indirect contract with the Contractor, for any of the following reasons:

PAGE 36

§ 14.3.2 The Contract Sum and Contract Time ~~shall~~ may be adjusted for increases in the cost and time caused by suspension, delay or interruption as described in Section 14.3.1. Adjustment of the Contract Sum ~~shall~~ may include profit. No adjustment shall be made to the extent

...

.4 assist Owner in the orderly transition of the Work to another contractor of the Owner's choosing or to the Owner in the Owner's sole discretion.

§ 14.4.3 In case of such termination for the Owner's convenience, the Contractor shall be entitled to receive payment for Work executed, and costs incurred by reason of such ~~termination, along with reasonable overhead and profit~~ termination on the Work not executed.

PAGE 37

Claims by either the Owner or Contractor must be initiated by written notice to the other party and to the Initial Decision Maker with a copy sent to the Architect, if the Architect is not serving as the Initial Decision Maker. ~~Claims by either party must be initiated within 21 days after occurrence of the event giving rise to such Claim or within 21 days after the claimant first recognizes the condition giving rise to the Claim, whichever is later.~~

Additions and Deletions Report for AIA Document A201™ – 2007. Copyright © 1911, 1915, 1918, 1925, 1937, 1951, 1958, 1961, 1963, 1966, 1970, 1976, 1987, 1997 and 2007 by The American Institute of Architects. **All rights reserved. WARNING: This AIA® Document is protected by U.S. Copyright Law and International Treaties. Unauthorized reproduction or distribution of this AIA® Document, or any portion of it, may result in severe civil and criminal penalties, and will be prosecuted to the maximum extent possible under the law.** This document was produced by AIA software at 08:39:36 on 11/21/2016 under Order No.7150521749_1 which expires on 10/03/2017, and is not for resale.
User Notes: (844049242)

...

~~§ 15.2 INITIAL DECISION~~

~~§ 15.2.1 Claims, excluding those arising under Sections 10.3, 10.4, 11.3.9, and 11.3.10, shall be referred to the Initial Decision Maker for initial decision. The Architect will serve as the Initial Decision Maker, unless otherwise indicated in the Agreement. Except for those Claims excluded by this Section 15.2.1, an initial decision shall be required as a condition precedent to mediation of any Claim arising prior to the date final payment is due, unless 30 days have passed after the Claim has been referred to the Initial Decision Maker with no decision having been rendered. Unless the Initial Decision Maker and all affected parties agree, the Initial Decision Maker will not decide disputes between the Contractor and persons or entities other than the Owner.~~

~~§ 15.2.2 The Initial Decision Maker will review Claims and within ten days of the receipt of a Claim take one or more of the following actions: (1) request additional supporting data from the claimant or a response with supporting data from the other party, (2) reject the Claim in whole or in part, (3) approve the Claim, (4) suggest a compromise, or (5) advise the parties that the Initial Decision Maker is unable to resolve the Claim if the Initial Decision Maker lacks sufficient information to evaluate the merits of the Claim or if the Initial Decision Maker concludes that, in the Initial Decision Maker's sole discretion, it would be inappropriate for the Initial Decision Maker to resolve the Claim.~~

~~§ 15.2.3 In evaluating Claims, the Initial Decision Maker may, but shall not be obligated to, consult with or seek information from either party or from persons with special knowledge or expertise who may assist the Initial Decision Maker in rendering a decision. The Initial Decision Maker may request the Owner to authorize retention of such persons at the Owner's expense.~~

~~§ 15.2.4 If the Initial Decision Maker requests a party to provide a response to a Claim or to furnish additional supporting data, such party shall respond, within ten days after receipt of such request, and shall either (1) provide a response on the requested supporting data, (2) advise the Initial Decision Maker when the response or supporting data will be furnished or (3) advise the Initial Decision Maker that no supporting data will be furnished. Upon receipt of the response or supporting data, if any, the Initial Decision Maker will either reject or approve the Claim in whole or in part.~~

~~§ 15.2.5 The Initial Decision Maker will render an initial decision approving or rejecting the Claim, or indicating that the Initial Decision Maker is unable to resolve the Claim. This initial decision shall (1) be in writing; (2) state the reasons therefor; and (3) notify the parties and the Architect, if the Architect is not serving as the Initial Decision Maker, of any change in the Contract Sum or Contract Time or both. The initial decision shall be final and binding on the parties but subject to mediation and, if the parties fail to resolve their dispute through mediation, to binding dispute resolution.~~

~~§ 15.2.6 Either party may file for mediation of an initial decision at any time, subject to the terms of Section 15.2.6.1.~~

~~§ 15.2.6.1 Either party may, within 30 days from the date of an initial decision, demand in writing that the other party file for mediation within 60 days of the initial decision. If such a demand is made and the party receiving the demand fails to file for mediation within the time required, then both parties waive their rights to mediate or pursue binding dispute resolution proceedings with respect to the initial decision.~~

PAGE 38

§ 15.3.1 Claims, disputes, or other matters in controversy arising out of or related to the Contract except those waived as provided for in Sections 9.10.4, 9.10.5, and 15.1.6 ~~shall be subject to mediation as a condition precedent to binding dispute resolution.~~ may be subject to mediation .

§ 15.3.2 The parties ~~shall~~ may endeavor to resolve their Claims by mediation ~~which, unless the parties mutually agree otherwise, shall be administered by the American Arbitration Association in accordance with its Construction~~

Additions and Deletions Report for AIA Document A201™ – 2007. Copyright © 1911, 1915, 1918, 1925, 1937, 1951, 1958, 1961, 1963, 1966, 1970, 1976, 1987, 1997 and 2007 by The American Institute of Architects. **All rights reserved. WARNING: This AIA® Document is protected by U.S. Copyright Law and International Treaties. Unauthorized reproduction or distribution of this AIA® Document, or any portion of it, may result in severe civil and criminal penalties, and will be prosecuted to the maximum extent possible under the law.** This document was produced by AIA software at 08:39:36 on 11/21/2016 under Order No.7150521749_1 which expires on 10/03/2017, and is not for resale.
User Notes: (844049242)

~~Industry Mediation Procedures in effect on the date of the Agreement.~~ . A request for mediation shall be made in writing, delivered to the other party to the Contract, and filed with the person or entity administering the mediation. ~~The request may be made concurrently with the filing of binding dispute resolution proceedings but, in such event, mediation shall proceed in advance of binding dispute resolution proceedings, which shall be stayed pending mediation for a period of 60 days from the date of filing, unless stayed for a longer period by agreement of the parties or court order. If an arbitration is stayed pursuant to this Section 15.3.2, the parties may nonetheless proceed to the selection of the arbitrator(s) and agree upon a schedule for later proceedings.~~

...

§ 15.4.1 ~~If the parties have selected arbitration as the method for binding dispute resolution in the Agreement, any Claim subject to, but not resolved by, mediation shall be subject to arbitration which, unless the parties mutually agree otherwise, shall be administered by the American Arbitration Association in accordance with its Construction Industry Arbitration Rules in effect on the date of the Agreement. A demand for arbitration shall be made in writing, delivered to the other party to the Contract, and filed with the person or entity administering the arbitration. The party filing a notice of demand for arbitration must assert in the demand all Claims then known to that party on which arbitration is permitted to be demanded.~~
Intentionally omitted.
§ 15.4.1.1 ~~A demand for arbitration shall be made no earlier than concurrently with the filing of a request for mediation, but in no event shall it be made after the date when the institution of legal or equitable proceedings based on the Claim would be barred by the applicable statute of limitations. For statute of limitations purposes, receipt of a written demand for arbitration by the person or entity administering the arbitration shall constitute the institution of legal or equitable proceedings based on the Claim.~~Intentionally omitted.

§ 15.4.2 ~~The award rendered by the arbitrator or arbitrators shall be final, and judgment may be entered upon it in accordance with applicable law in any court having jurisdiction thereof.~~
Intentionally omitted.
§ 15.4.3 ~~The foregoing agreement to arbitrate and other agreements to arbitrate with an additional person or entity duly consented to by parties to the Agreement shall be specifically enforceable under applicable law in any court having jurisdiction thereof.~~Intentionally omitted.

§ 15.4.4 CONSOLIDATION OR JOINDER Intentionally omitted.
~~**§ 15.4.4.1** Either party, at its sole discretion, may consolidate an arbitration conducted under this Agreement with any other arbitration to which it is a party provided that (1) the arbitration agreement governing the other arbitration permits consolidation, (2) the arbitrations to be consolidated substantially involve common questions of law or fact, and (3) the arbitrations employ materially similar procedural rules and methods for selecting arbitrator(s).~~

~~**§ 15.4.4.2** Either party, at its sole discretion, may include by joinder persons or entities substantially involved in a common question of law or fact whose presence is required if complete relief is to be accorded in arbitration, provided that the party sought to be joined consents in writing to such joinder. Consent to arbitration involving an additional person or entity shall not constitute consent to arbitration of any claim, dispute or other matter in question not described in the written consent.~~

~~**§ 15.4.4.3** The Owner and Contractor grant to any person or entity made a party to an arbitration conducted under this Section 15.4, whether by joinder or consolidation, the same rights of joinder and consolidation as the Owner and Contractor under this Agreement.~~

Additions and Deletions Report for AIA Document A201™ – 2007. Copyright © 1911, 1915, 1918, 1925, 1937, 1951, 1958, 1961, 1963, 1966, 1970, 1976, 1987, 1997 and 2007 by The American Institute of Architects. **All rights reserved. WARNING: This AIA® Document is protected by U.S. Copyright Law and International Treaties. Unauthorized reproduction or distribution of this AIA® Document, or any portion of it, may result in severe civil and criminal penalties, and will be prosecuted to the maximum extent possible under the law.** This document was produced by AIA software at 08:39:36 on 11/21/2016 under Order No.7150521749_1 which expires on 10/03/2017, and is not for resale.
User Notes: (844049242)

Certification of Document's Authenticity

AIA® Document D401™ – 2003

I, Keith McBey, hereby certify, to the best of my knowledge, information and belief, that I created the attached final document simultaneously with its associated Additions and Deletions Report and this certification at 08:39:36 on 11/21/2016 under Order No. 7150521749_1 from AIA Contract Documents software and that in preparing the attached final document I made no changes to the original text of AIA® Document A201™ – 2007, General Conditions of the Contract for Construction, as published by the AIA in its software, other than those additions and deletions shown in the associated Additions and Deletions Report.

(Signed)

President
(Title)

December 1, 2016
(Dated)

AIA Document D401™ – 2003. Copyright © 1992 and 2003 by The American Institute of Architects. **All rights reserved.** WARNING: This AIA® Document is protected by U.S. Copyright Law and International Treaties. Unauthorized reproduction or distribution of this AIA® Document, or any portion of it, may result in severe civil and criminal penalties, and will be prosecuted to the maximum extent possible under the law. This document was produced by AIA software at 08:39:36 on 11/21/2016 under Order No.7150521749_1 which expires on 10/03/2017, and is not for resale.
User Notes: (844049242)

THE CITY OF NASHUA
Financial Services
Purchasing Department

"The Gate City"

December 1, 2016
Memo #17-071

TO: MAYOR DONCHESS
FINANCE COMMITTEE

SUBJECT: CONTRACT FOR PHASE IV PERMITTING CONTRACT (VALUE: NOT TO EXCEED $300,000)
DEPARTMENT: 168 SOLID WASTE; FUND: BOND
ACTIVITY: LANDFILL EXPANSION PHASE III & IV

Please see the attached communication from Jeff Lafleur, Solid Waste Department Superintendent dated October 27, 2016 for the information related to this purchase.

Pursuant NRO § 5-83 Professional Services, which allows the purchase of professional services without soliciting competitive bids, the Solid Waste Department intends to award this work directly to Sanborn Head and Associates.

The Solid Waste Department Superintendent, Board of Public Works (October 27, 2016 meeting) and the Purchasing Department recommend the award of this purchase in an amount not to exceed **$300,000 to Sanborn Head and Associates** of **Concord, NH.**

Respectfully,

Dan Kooken
Purchasing Manager

Cc: J Lafleur L Fauteux

229 Main Street • Nashua, New Hampshire 03061 • Phone (603) 589-3330 • Fax (603) 589-3344

City of Nashua, Public Works Division

To: Board of Public Works Meeting Date: October 27, 2016

From: Jeff Lafleur, Superintendent
Solid Waste Department

C. Motion: To approve a contract with Sanborn Head and Associates Inc. to begin the process of permitting the Phase IV lined landfill with NHDES in the amount not to exceed $300,000. Funding will be through Department 168 Solid Waste; Fund: Bond; Activity: Landfill Expansion Phase III & IV.

Attachments: Sole Source Memo, Sanborn Head and Associates Scope of work

Discussion: The Superintendent of the Solid Waste Department and the Director of Public Works recommend that the City begin the process of permitting the conceptual Phase IV lined landfill with the New Hampshire Department of Environmental Services (NHDES). The Phase IV landfill is to be sited at the Four Hills facility in the valley formed by the closed MSW landfill and the Phase I lined landfill. It is projected to cover approximately 27 acres, will provide the City with an estimated waste disposal capacity of 2.6 million cubic yards, and extend the life of the landfill by 20-plus years. Although the disposal capacity of this proposed phase will not be needed for many years, it is recommended that the City begin the permitting process now to avoid potential future changes to solid waste regulations that could prohibit further landfill expansion. This expenditure covers work to be performed in FY 2017. We expect that this project will take several years to complete at an approximate total cost of $500,000.

THE CITY OF NASHUA

Division of Public Works

Solid Waste Department

"The Gate City"

September 6, 2016

Re: Memo – Sanborn Head & Associates Phase IV Landfill Permitting for FY2017

To: Daniel Kookan, Purchasing Manager
Carolyn O'Conner, DPW Financial Manager

This memo supports the Solid Waste Department's request to issue a contract and purchase order to Sanborn Head & Associates, Inc. (SHA) for $300,000 to prepare permitting documents for the proposed Phase IV landfill. The permitting documents include New Hampshire Department of Environmental Services (NHDES) Type IA solid waste facility permit modification and an Alteration of Terrain (AoT) permit for storm water management. This contract and purchase order would cover work performed by SHA in FY2017. An additional $200,000 budgeted over several more fiscal years will likely be required to complete the permitting process.

The proposed Phase IV lined landfill is to be sited in the valley formed by the closed MSW landfill and the Phase I lined landfill. It will cover approximately 27 acres with an estimated capacity of 2.6 million cubic yards. It will potentially provide the City with 20 additional years of disposal capacity.

Pursuant NRO § 5-83 Professional Services, which allows the purchase of professional services without soliciting competitive bids, the Solid Waste Department intends to award this work directly to SHA. SHA has served as the City's consulting engineers for the Four Hills facility since approximately 2009, providing expertise in environmental permitting, landfill gas design and construction, and other landfill infrastructure projects. They have detailed knowledge of the site and the project requirements and objectives. Retaining another engineering company to perform this work would result in duplication of effort and delays.

Respectfully Submitted,

Jeff Lafleur
Superintendent, Solid Waste Department

Cc: Lisa Fauteux, Director of Public Works

840 West Hollis Street • Nashua, New Hampshire 03062 • Phone (603) 589-3410 • Fax (603) 589-3448

SANBORN HEAD
Building Trust. Engineering Success.

20 Foundry Street
Concord, NH 03301

Mr. Jeff Lafleur
Superintendent of Solid Waste
Nashua Division of Public Works, Solid Waste Department
840 West Hollis Street
Nashua, NH 03062

September 2, 2016
File No. 3066.08

Re: Phase IV – Preliminary Opinion of Cost and Schedule Update for FY2017 (revised)
Four Hills Landfill, Nashua, New Hampshire

Dear Jeff:

We understand the City of Nashua (City) would like to include, as part of the City's budget for Fiscal Year 2017 (FY2017), costs for services required of Sanborn Head & Associates, Inc. (Sanborn Head) to begin efforts to design and permit new landfill capacity in the area between the closed Unlined Landfill and the active Lined Landfill at the Four Hills Landfill in Nashua, New Hampshire (i.e., Phase IV). This letter summarizes such services, and includes a preliminary opinion of cost for FY2017 in relation to Phase IV. The opinion of cost may include some of the services that could be incurred after FY2017 (e.g., services required during the permit review process).

Preliminary Opinion of Cost

Our preliminary opinion of cost for design/permitting services for Phase IV is based on several assumptions relative to our understanding of current New Hampshire environmental regulations including the Solid Waste Rules[1], the existing conditions at the Four Hills Landfill, the City's projected waste receipts, and the remaining airspace in Phases I and II. Based on our understanding, the Phase IV project would involve the following major activities, listed in no particular order:

- Removing the soil components of the closed Unlined Landfill's geosynthetic final cover system in the footprint area of Phase IV, constructing a liner system that meets the requirements of the Solid Waste Rules and extending the liner system across the area between the closed Unlined Landfill and the Lined Landfill to connect with the liner system in the Lined Landfill.
- Establishing new landfill access roads.
- Establishing new stormwater drainage channels, and possibly adding detention/retention capacity.

[1] In July 2014, the NHDES promulgated new Solid Waste Rules. Some of the new rules may impact the design and permitting of the proposed Phase IV project (e.g., setback distances). For the purposes of this letter, the scope and opinions presented herein assume that the Phase IV project is in compliance with the new rules.

- Relocating the main landfill gas (LFG) conveyance header pipe from between the closed Unlined Landfill and the active Lined Landfill to the north and west of the active Lined Landfill area.
- Modifying the Phase I and II landfill gas collection and control system (GCCS) so that that it may be connected to the relocated main LFG conveyance header pipe.
- Decommissioning 12 existing groundwater monitoring wells and replacing some or all of these wells.

We further understand that as part of the Phase IV permit application, the City would like to include the following modifications for Phases I and II:

- Modify the components of the final cover system to reflect current materials and design standards; and
- Increase the inclination of the final sideslopes.

Figure 1 illustrates the potential scope of the Phase IV expansion. Based on the conceptual layout, Sanborn Head estimates that developing the approximately 27-acre Phase IV footprint area could provide on the order of 2.6 million cubic yards of landfill capacity.

Facility Permitting

Developing the proposed Phase IV area would require a Type I-A solid waste facility permit modification as the new area would both increase the approved design capacity and extend the date of the permit. In addition to modifying the Solid Waste Permit, an Alteration of Terrain (AoT) permit, which addresses stormwater runoff and management, would be required as well as a modification of the Groundwater Management Permit (GMP) and the facilities' Title V air permit. Services required to revise the GMP and Title V air permit are expected to be performed after FY2017.

Preparation of an application for a Type I-A permit modification, would involve the following:

- Preparing for signature by the City, the Type I-A application form;
- Preparing notifications to abutters and other potentially affected entities in accordance with Env-Sw 314.08 and 303.05;
- Preparing Notice of Filings to potentially affected agencies as needed in accordance with Env-Sw 303.06 through 12;
- Preparing a Site Report in accordance with Env-Sw 314.10, which could include, but not be limited to, the following:
  - A demonstration of the siting requirements;
  - A description of the existing conditions;
  - Tax, land use, natural resource, and other related maps;
  - A statement of the need for the proposed expansion;

  - An evaluation of the potential impacts (both positive and negative) of the proposed expansion;
  - A statement of the public benefit of the proposed expansion;
  - A hydrogeologic report, to include an assessment of the depth to the groundwater table and a preliminary work plan for groundwater monitoring piezometers; and
  - A traffic study;
- Preparing permit-level engineering drawings, specifications, and calculations supporting the proposed design in accordance with Env-Sw 314.11;
- Updating the Operating Plan in accordance with Env-Sw 1105.11;
- Revising the Closure Plan in accordance with Env-Sw 1106.04; and
- Preparing a Financial Report in accordance with Env-Sw 314.12 that provides an opinion of cost to construct and operate Phase IV, projected tipping fees, and the type and source of funding for the project.

The above application components are to be prepared in consideration of, and in accordance with, the requirements of Env-Sw 315.05, 800, and 1000.

The table below summarizes our preliminary opinion of the cost for preparing permit applications for Phase IV (the application fees are NOT included). Our opinion is based on our understanding of: (i) the current NHDES AoT and Solid Waste Rules; (ii) our experience preparing Type I-A permit modification applications in New Hampshire and similar permit applications in other states; and (iii) our understanding of the type, extent, and quality of the readily available information that can be used for the preparation of the AoT and Type I-A permit modification applications. Additional assumptions made to develop the opinion of cost are outlined towards the end of this letter.

TASK	PRELIMINARY OPINION OF COST
Prepare AoT application	$50,000
Prepare Type I-A permit modification application	$250,000
Estimated Total Fee	**$300,000**

The above preliminary opinion of cost is for engineering services during fiscal year 2017. At this time, we recommend that the City budget and additional $200,000 for future fiscal years for Sanborn Head to: (i) address NHDES comments to the AoT permit application and Type I-A PMA; (ii) provide support at public hearings and meetings; (iii) prepare the Type II PMA; and (iv) assist with preparing construction bid documents.

In addition to the costs identified above, the fee for Type I-A permit application is estimated to be at least **$20,000** (see Env-Sw 310.07). Furthermore, the AoT permit application fee for the project could be on the order of **$6,200** (Env-Wq 1503.32).

Assumptions

- Response to NHDES comments for all applications will occur sometime after FY2017.
- Services required to prepare for/attend public hearings will be performed after FY2017.
- Services required for preparing/submitting the GMP and Title V renewal will not be required until after FY2017.
- The City will make available for use all historic engineering and hydrogeologic studies, permit applications, reports, drawings, and calculations related to the Four Hills Landfill site; additional subsurface explorations are not included.
- The City will provide recent topographic survey (i.e., 2016) of the proposed Phase IV area in a digital format that is compatible with AutoCAD Civil 3D. The survey will be geo-referenced to the existing site benchmarks, and references the state plane coordinate and vertical datum used. The resulting topographic map will be produced at a scale of 1 inch equals 40 feet, with 2-foot contours.
- The budget and schedule do not factor an allowance for delays caused by possible opposition or litigation.
- Potential changes to the NHDES rules are not accounted for.
- Field sampling or testing (groundwater, stormwater, surface water, soil, or waste) are not accounted for; Sanborn Head will rely on historic information to be provided by the City.

Closing

We appreciate the opportunity to be of continued service to the City. Please contact me should you require additional information.

Very truly yours,
SANBORN, HEAD & ASSOCIATES, INC.

Ryan Clay

Ryan L. Clay, E.I.T.
Senior Project Engineer

Eric S. Steinhauser

Eric S. Steinhauser, P.E., CPESC, CPSWQ
Senior Project Director

RLC/RLC/ESS:ess

Enclosure: Figure 1 – Conceptual Layout, Phase VI Expansion Area

P:\3000s\3066.08\Project Control\Phase IV\20160902 Ph IV ltr - FY2017.docx

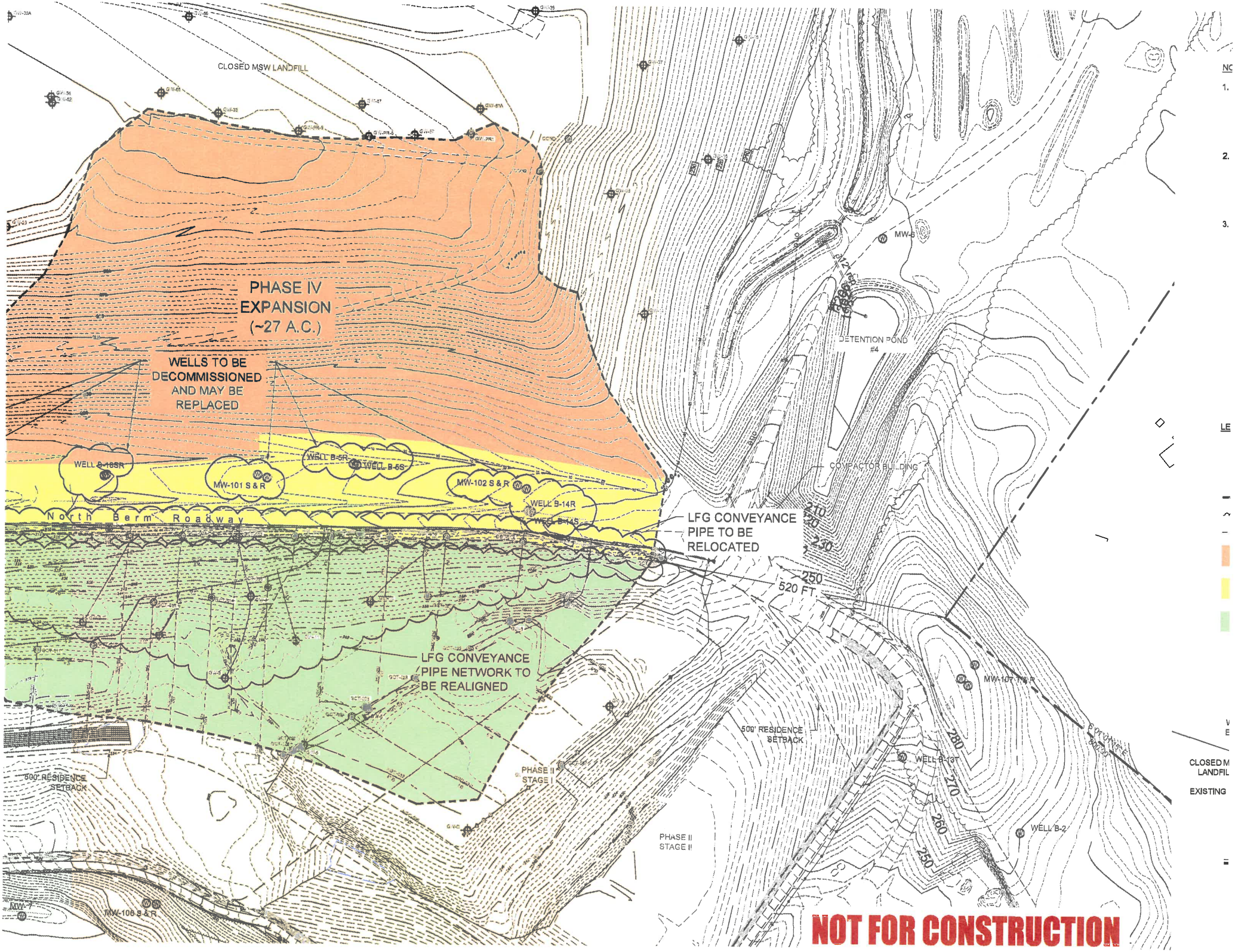
CLOSED MSW LANDFILL
PHASE IV
EXPANSION
(~27 A.C.)
WELLS TO BE
DECOMMISSIONED
AND MAY BE
REPLACED
WELL B-16SR
MW-101 S & R
WELL B-5R
WELL B-5S
MW-102 S & R
WELL B-14R
WELL B-14S
North Berm Roadway
LFG CONVEYANCE
PIPE TO BE
RELOCATED
520 FT.
LFG CONVEYANCE
PIPE NETWORK TO
BE REALIGNED
500' RESIDENCE
SETBACK
PHASE II
STAGE I
PHASE II
STAGE II
MW-106 S & R
MW-8
DETENTION POND
#4
COMPACTOR BUILDING
MW-107 T & R
WELL B-13T
WELL B-2
EXISTING
210
220
230
250
260
270
280
NOT FOR CONSTRUCTION

THE CITY OF NASHUA
Financial Services
Purchasing Department

"The Gate City"

December 1, 2016
Memo #17-073

TO: MAYOR DONCHESS
FINANCE COMMITTEE

SUBJECT: CONTRACT FOR PHASE III DESIGN (VALUE: NOT TO EXCEED $200,000)
DEPARTMENT: 168 SOLID WASTE; FUND: BOND
ACTIVITY: LANDFILL EXPANSION PHASE III & IV

Please see the attached communication from Jeff Lafleur, Solid Waste Department Superintendent dated October 27, 2016 for the information related to this purchase.

Pursuant NRO § 5-83 Professional Services, which allows the purchase of professional services without soliciting competitive bids, the Solid Waste Department intends to award this work directly to Sanborn Head and Associates.

The Solid Waste Department Superintendent, Board of Public Works (October 27, 2016 meeting) and the Purchasing Department recommend the award of this purchase in an amount not to exceed $200,000 to **Sanborn Head and Associates** of **Concord, NH.**

Respectfully,

Dan Kooken
Purchasing Manager

Cc: J Lafleur L Fauteux

229 Main Street • Nashua, New Hampshire 03061 • Phone (603) 589-3330 • Fax (603) 589-3344

City of Nashua, Public Works Division

To: Board of Public Works Meeting Date: October 27, 2016

From: Jeff Lafleur, Superintendent
Solid Waste Department

B. Motion: To approve a contract with Sanborn Head and Associates Inc. to prepare and submit a NHDES Type II Permit Modification and plans and specifications for the construction of the Phase III lined landfill expansion in the amount not to exceed $200,000. Funding through Department 168 Solid Waste; Fund: Bond; Activity: Landfill Expansion Phase III & IV

Attachments: Sole Source Memo, Sanborn Head and Associates scope of work

Discussion: The Superintendent of the Solid Waste Department and the Director of Public Works recommend that the City begin the process of designing and constructing the Phase III lined landfill expansion. This is the final phase of the lined landfill expansion permitted by the New Hampshire Department of Environmental Services (NHDES) in standard permit #DES-SW-SP-95-002 issued on June 26, 1995. The Phase III landfill will be located adjacent to the southern boundary of the Phase II landfill. It is anticipated to cover approximately 9.4 acres with an estimated disposal capacity of 1.5 million cubic yards and a life expectancy of 10-plus years. Work to be performed under this contract includes preparation of a NHDES Type II Permit Modification application, construction plans and specifications, an Alteration of Terrain (AoT) permit application, and an evaluation of engineering alternatives to identify opportunities for improved construction and operational methods and cost savings. The additional landfill air space is not needed for several years; however, it is recommended that this Phase be constructed within the next three years to ensure disposal capacity is available when capacity in the Phase I/II landfill is exhausted.

THE CITY OF NASHUA
Division of Public Works
Solid Waste Department

"The Gate City"

August 18, 2016

Re: Memo – Sanborn Head & Associates Design, Permitting and Bid Document Preparation – Phase III Landfill Construction

To: Daniel Kookan, Purchasing Manager
Carolyn O'Conner, DPW Financial Manager

This memo supports the Solid Waste Department's request to issue a contract and purchase order to Sanborn Head & Associates, Inc. (SHA) for $200,000 to prepare design, permitting and bid documents for construction of the Phase III lined landfill. This is the final phase of the lined expansion landfill permitted by the New Hampshire Department of Environmental Services (NHDES) in standard permit #DES-SW-SP-95-002 issued on June 26, 1995. The Phase III landfill will cover approximately 10 acres and will be constructed adjacent to the southern boundary of the Phase II landfill.

Pursuant NRO § 5-83 Professional Services, which allows the purchase of professional services without soliciting competitive bids, the Solid Waste Department intends to award this work directly to SHA. SHA has served as the City's consulting engineers for the Four Hills facility since approximately 2009, providing expertise in environmental permitting, landfill gas design and construction, and other landfill infrastructure projects. They have detailed knowledge of the site and the project requirements and objectives. Retaining another engineering company to perform this work would result in duplication of effort and delays. The construction of the Phase III lined landfill should commence within the next one to two years to ensure the City's waste disposal capacity is not interrupted when available capacity in the Phase I/II landfill is exhausted.

Respectfully Submitted,

Jeff Lafleur
Superintendent, Solid Waste Department

Cc: Lisa Fauteux, Director of Public Works

840 West Hollis Street • Nashua, New Hampshire 03062 • Phone (603) 589-3410 • Fax (603) 589-3448

SANBORN HEAD
Building Trust. Engineering Success.

20 Foundry Street
Concord, NH 03301

Mr. Kerry Converse
Landfill Engineer
Nashua Division of Public Works, Solid Waste Department
840 West Hollis Street
Nashua, NH 03062

September 2, 2016

Re: Proposed Engineering Scope of Services
Type II Permit Modification Application and Construction Documents
Phase III Landfill Expansion, Four Hills Landfill, Nashua, New Hampshire

Dear Kerry:

Sanborn, Head & Associates, Inc. (Sanborn Head) is pleased to present our proposed engineering scope of services to prepare a Type II Modification to Solid Waste Facility Permit (Type II PMA) and construction documents for Phase III at the Four Hills Landfill. Phase III is the third and final permitted expansion area associated with the lined landfill approved by the New Hampshire Department of Environmental Services (NHDES) as Standard Permit Number DES-SW-SP-002 issued on June 26, 1995, and modified on February 27, 1998. Based on a review of available permitting documents, we understand that the proposed Phase III expansion would consist of about 9.4 acres of lined area and would provide about 1.0 million cubic yards (yd^3) of airspace. Furthermore, we understand that a portion of the 9.4-acre lined landfill expansion is located within the 500-foot residential setback, and, as such, that portion of the expansion area would not be eligible for waste placement and the projected airspace may be less than previously calculated.

BACKGROUND

We understand the Phase I of the lined landfill began accepting waste in 2003 and that Phase II began accepting waste in 2009. Construction permitting for each phase of the lined landfill involved preparing a Type II PMA and an Alteration of Terrain (AoT) permit application for NHDES review and approval. We anticipate that similar permit applications will be required for Phase III.

According to the available permit documents, the design of the Phase III leachate collection and transmission system is different than that constructed for the previous phases. While Phases I and II incorporated a gravity leachate drain that includes a penetration through the liner system at the north end of Phase I, the proposed liner base grading in Phase III does not lead itself to continuing the gravity drain concept. Rather, a leachate collection sump and pump system will be needed to remove leachate from the Phase III lined area. We understand that the collected leachate will be pumped north to the leachate manhole associated with Phase I, from which the leachate would drain by gravity to the City's wastewater treatment plant. Because a leachate pump system will be needed for the Phase III expansion, Sanborn Head proposes to incorporate a supervisory control and data

acquisition (SCADA) system to automate the collection and recording of leachate management system operating data.

The City has expressed an interest in evaluating a modification to the perimeter berm that would honor the 500-foot setback, reduce the overall liner system construction cost, and optimize airspace with the goal of maintaining the permitted airspace (i.e., 1.0 million yd^3). At present, the Phase III design includes a significant amount of lined area that would not be usable for waste disposal. Recently, Sanborn Head worked with the City to modify the vertical barrier that is required along the 500-foot setback, and one of the goals of this project is to avoid the need to continue constructing the vertical barrier.

Lastly, as part of this project, Sanborn Head will include the following design modifications that, in combination with other project factors, should decrease construction costs, improve the performance of the liner and leachate collection systems, and optimize the overall airspace:

- Modify the base liner system by:
  - eliminating the geosynthetic clay liner component of the primary liner except in the leachate collection sump;
  - replacing the single-sided geonet, geocomposite drainage materials proposed for the base liner system with a double-side geonet, geocomposite drainage materials; and
  - consider using tubular, geocomposite drainage materials rather than geonet, geocomposite drainage materials to reduce or eliminate the need for leachate collection piping;
- Consider lowering the proposed base grades based on an evaluation of recent groundwater and bedrock data;
- Increase the inclination of the final cover sideslopes from the permitted 3.5 horizontal to 1 vertical (3.5H:1V) to 3H:1V;
- Increase the inclination of the liner sideslopes from permitted 4H:1V to no steeper than 2H:1V (see Env-SW 805.05(h)); and
- Incorporate a mechanically stabilized perimeter berm.

Because modifications to the permitted design are anticipated, a Type IB PMA will need to be prepared and submitted to the NHDES for review and approval. Furthermore, to avoid the need for a Type IA PMA, the design modifications will be such that there will not an increase to the permitted airspace.

SCOPE OF SERVICES

Task 1 Engineering Alternatives Evaluation

Considering the City's interest in revising the design of the perimeter berm and separation wall, Sanborn Head will work with the City to evaluate alternative perimeter berm designs. To kick off this task, Sanborn Head proposes having a brainstorming meeting during which the logistical, operational, technical, and regulatory issues associated with the perimeter

berm and other potential design modifications can be discussed. Action items from the meeting are anticipated to include preparing:

- A conceptual design of an alternative perimeter berm;
- A revised liner and leachate collection system design;
- A conceptual design of a leachate pumping and transmission system;
- A conceptual liner and final cover grading plan;
- Calculations of the estimated airspace volume, construction materials quantities, and a comparison between the proposed and alternative designs;
- Calculations of slope stability, leachate collection transmissivity; and
- An opinion of the construction costs of the permitted design versus the alternative design.

We anticipate preparing for and attending one meeting with the City to present the alternative design and the engineering comparison. The desired outcome of the meeting is direction on how to proceed with the Phase III PMA and AoT documents.

Task 2 Solid Waste Permit Modification Applications

Sanborn Head will prepare two Solid Waste PMAs (a Type IB and a Type II) for the City's signature and submittal to the NHDES. The Type IB PMA will specifically address the design modifications accepted by the City under Task 1. The Type II PMA will provide the construction documents. Based on our experience working with the NHDES on similar type projects, we anticipate submitting both PMAs simultaneously.

The PMAs will include a completed form, a brief summary of the project, and references to supporting documentation. In addition to completing the application form, we will prepare a cover letter for the City's use in transmitting the application to the NHDES. Also included under this task is the reproduction of the PMAs. In accordance with current NHDES preferences, we plan on submitting an electronic copy of each PMA so only one paper copy of the application package will be prepared. Likewise, we will provide the City with an electronic copy as well as one paper copy.

Prior to submitting the PMAs, we propose having a pre-submittal meeting with the NHDES. We anticipate that this meeting would be held in Concord at the NHDES office and would serve to assist the NHDES in their review of the documents. Our services would also include preparing responses to the NHDES review comments to the PMAs. At this time, the extent of review comments, if any, is not known. For purposes of this proposal, we carried an allowance of $5,000 to respond to comments. We will notify you if it appears that the effort to respond to comments is greater than we assumed.

For your convenience, we estimated the fees associated with submitting the PMAs. The fee for a Type IB PMA is $100. For the Type II PMA, the fee is dependent upon the life expectancy of the area being constructed, and was calculated using the formula provided in Env-Sw 310.08(a) of the Solid Waste Rules. We estimate that permit application fee will be $17,000. Please note that we assume that the City will pay the fees directly to the NHDES at

the time the PMAs are submitted, and, as such, we did not include the fees in our budget estimate.

Task 3 Hydrogeologic Services

According to the 1992 Solid Waste Facility Permit, as part of the final design of Phase III, the Type II PMA is to include documentation of the elevation of the groundwater table beneath the Phase III area. Specifically, piezometers need to be installed in the Phase III area to evaluate the groundwater elevation with respect to the overall landfill liner system design and the requirements of the NHDES solid waste rules. As noted in the permit, a detailed work plan is to be prepared and submitted to NHDES for approval prior to installing the piezometers. As part of the work plan preparation, Sanborn Head proposes to visit the Phase III area to observe the existing topography and, if feasible, assess the condition of groundwater monitoring wells that may be in the area. Using the information from the site visit and the design intent for the liner system, Sanborn Head will prepare a work plan, which will include a site map indicating the proposed piezometer locations with respect to the proposed liner design. A draft work plan will be submitted to the City for review and comment. Once the work plan is finalized, Sanborn Head will provide the City with paper and pdf versions for submission to the NHDES. We anticipate addressing one round of NHDES review comments. Once the work plan is approved by NHDES, Sanborn Head will mark out the piezometer locations, contact DigSafe, retain a driller, supervise and log the piezometer installation (including sampling of the soils encountered), and retain a licensed professional land surveyor to locate the piezometers. Sanborn Head will select representative soil samples for geotechnical laboratory testing. The information from these activities will be summarized in a report. A draft report will be submitted to the City for review and comment. Once the report is finalized, Sanborn Head will include it with the Type II PMA.

Task 4 AoT Permit Application

Consistent with other land disturbing construction projects at the Four Hills Landfill, an AoT permit application will be prepared along with the Type II PMA. Sanborn Head will prepare the AOT permit application form and supporting documentation, including: (i) a narrative describing the proposed stormwater management system and associated erosion and sedimentation control features; (ii) an evaluation of the existing and proposed hydrology; (iii) pre- and post-development runoff models and relevant design calculations supporting the selection of proposed BMPs; and (iv) support figures illustrating the evaluation and proposed design.

The application and supporting documents will be prepared in accordance with the requirements of the AoT Rules (Env-Ws 1500) and will be signed and sealed by a Professional Engineer licensed to practice in the State of New Hampshire. Our services will also include reproducing the application and supporting information as a package to be submitted to the NHDES. One hard copy and one electronic copy of the application will be submitted to the NHDES, and one hard copy will be provided to the City.

For your convenience, we estimated the AoT Permit Application fee according to the fee schedule provided on the NHDES website, which is based upon the proposed area of disturbance. Although the exact proposed area of disturbance is not known at this time, we believe it will be somewhere between 400,000 and 800,000 square feet, which corresponds to a fee of $2,750 to $4,750, the maximum fee. Please note that we assume that the City will pay this fee directly to the NHDES at the time the application is submitted, and, as such, did not include the fee in our budget estimate.

Task 5 Construction Documents

Sanborn Head will prepare Construction Documents that will be included with the Type II PMA. We anticipate that the Construction Documents will include the following components:

- General and Technical Specifications;
- Construction Drawings; and
- Construction Quality Assurance Plan.

Sanborn Head will prepare general specifications for the project (Division 1), and technical specifications for the various components required. Typically, solid waste cell construction projects like Phase III include Site Work (Division 2), Concrete (Division 3), Pumps (Division 11), Mechanical (Division 15), and Electrical (Division 16).

Sanborn Head will prepare Construction Drawings for the project. The Construction Drawings will be based upon the drawings included with the Type IB PMA.

Task 6 Project Management and Meetings

We assume that we will meet with the City three times at the site during the development of the Phase III project. We expect that an initial meeting would be held within two weeks of our receipt of authorization to proceed to review major design issues and establish a project schedule. Subsequent meetings would be held to review the draft documents and incorporate the City's comments as the design progresses. The meetings will be particularly useful in resolving issues regarding site access, construction sequencing, material management, landfill gas management, stormwater management, and leachate system design and should serve to keep the project on track from a schedule standpoint. We expect that the meetings would involve Sanborn Head's project staff involved in preparation of the construction documents, and that each meeting would require up to 4 hours.

ASSUMPTIONS

- The City will provide recent topographic survey (i.e., 2016) of the Phase III area in a digital format that is compatible with AutoCAD Civil 3D. The survey will be geo-referenced to the existing site benchmarks, and references the state plane coordinate and vertical datum used. The resulting topographic map will be produced at a scale of 1 inch equals 40 feet, with 2-foot contours.

- The City will provide the permitted Phase III liner and final cover grades in digital format compatible with AutoCAD Civil 3D.
- The budget and schedule do not factor an allowance for delays caused by possible opposition or litigation.
- Potential changes to the NHDES rules and fees are not accounted for.
- Field sampling or analytical testing (groundwater, stormwater, surface water, soil, or waste) are not accounted for; Sanborn Head will rely on historic information to be provided by the City.

BUDGET ESTIMATE AND BASIS OF BILLINGS

The budget estimate for the services described above is $200,000. A breakdown of cost by task is presented below. Billings for our services will be based on actual accrued labor and expenses. Our 2016 Schedule of Fees is enclosed. We will not invoice in excess of the budgeted amount without your approval. Please note that this proposal does not include bid phase or construction phase services.

TASK	Estimated Fee
Engineering Alternatives Evaluation	$30,000
Solid Waste Permit Modification Applications	
Type IB (includes pre-submittal meeting)	$4,200
Type II (includes response to comments allowance)	$8,200
Hydrogeologic Services	$70,600
AoT Permit Application	$22,000
Construction Documents	$55,000
Project Management and Meetings	$10,000
Estimated Total Fee	**$200,000**

SCHEDULE

Sanborn Head is available to begin working on this project following authorization to proceed from the City.

TERMS OF ENGAGEMENT

The terms of engagement are described in our Agreement with the City of Nashua, New Hampshire dated June 27, 2016.

ACCEPTANCE

We understand that acceptance of this proposal will be provided in a City issued Purchase Order to Sanborn Head for these services.

CLOSING

Thank you for the opportunity to submit our proposed engineering scope of services. We look forward to working with you on this project. Please do not hesitate to call us should you require additional information.

Very truly yours,
SANBORN, HEAD & ASSOCIATES, INC.

Ryan L. Clay, P.E.
Senior Project Engineer

Eric S. Steinhauser, PE, CPESC, CPSWQ
Senior Project Director

ESS/RLC:ess

Enclosure: 2016 Schedule of Fees

P:\Opportunities\City of Nashua, Phase 3 Permit Modification Nashua, NH\Proposal\20160902 Nashua Ph III proposal.docx

IN WITNESS WHEREOF, the parties hereto have caused this contract to be signed and intend to be legally bound thereby.

_____
City of Nashua, NH (signature)

James Donchess, Mayor
(Printed Name and Title)

Date _____

SANBORN | HEAD

Building Trust. Engineering Success.

SANBORN, HEAD & ASSOCIATES, INC.
2016 Schedule of Fees
City of Nashua, New Hampshire

Senior Vice President	$198
Vice President	$188
Project Director	$177
Senior Project Manager	$151
Project Manager	$141
Senior Engineer/Geologist	$123
Project Engineer/Geologist	$115
Engineer/Geologist	$105
Supervising Technician	$94
Senior Engineering Technician	$85
Engineering Technician	$79
Support Staff	$68

Subcontractors and Outside Services	Cost plus 10%
Other Direct Expenses	Cost plus 10%

Hourly rates will be charged for time worked on the project and for the time required for travel between the office and the meeting or project site. Local travel will be at IRS allowed rates.

Overtime hours will be charged using the hourly rates listed above.

Hourly rates for expert witness testimony, including preparation time, and other special services such as corporate acquisition due diligence studies that generally require a dedicated commitment of senior staff, will be provided upon request.

Sanborn, Head & Associates, Inc. reserves the right to revise this Schedule of Fees annually.

P:\Opportunities\City of Nashua, Phase 3 Permit Modification Nashua, NH\Proposal\2016 Schedule of Fees.docx

THE CITY OF NASHUA

Financial Services

Purchasing Department

"The Gate City"

December 1, 2016
Memo #17-076

TO: MAYOR DONCHESS
FINANCE COMMITTEE

SUBJECT: PURCHASE OF ONE (1) PIPELINE INSPECTION CAMERA VAN (VALUE: $78,544)
DEPARTMENT: 169 WASTEWATER; FUND: WERF – COLLECTION SYSTEMS

Please see the attached communication from Noelle Osborne, Wastewater Department Operations Supervisor, dated November 21, 2016 for the information related to this purchase.

Pursuant to **§ 5-78 Major purchases (greater than $10,000)** A. All supplies and contractual services, except as otherwise provided herein, when the estimated cost thereof shall exceed $10,000 shall be purchased by formal, written contract from the lowest responsible bidder, after due notice inviting bids.

The Wastewater Department Operations Supervisor, Board of Public Works (11/21/2016 meeting) and the Purchasing Department recommend this purchase in an amount of **$78,544** to **Freightliner of New Hampshire** of **Londonderry, NH.**

Respectfully,

Dan Kooken
Purchasing Manager

Cc: N Osborne L Fauteux

229 Main Street • Nashua, New Hampshire 03061 • Phone (603) 589-3330 • Fax (603) 589-3344

City of Nashua, Public Works Division

To: Board of Public Works Meeting Date: November 21, 2016

From: Noelle Osborne
Plant Operations Supervisor

Re: Purchase of a 2017 Freightliner M2 Pipeline Inspection Camera Van

Motion C : To approve the purchase of a 2017 Freightliner M2 106 Medium Duty Box Van for use as the Pipeline Inspection Camera Van from Freightliner of New Hampshire in Londonderry New Hampshire for a price of $78,544.00. Department: 169 Wastewater; Fund: WERF - Collection Systems; Account Classification 81 Machinery & Equipment.

Attachments: Quote and Bid Sheet

Discussion: The Wastewater Department went out to bid in September to pursue a replacement to the current 15 year old pipeline inspection camera van. Freightliner of New Hampshire in Londonderry New Hampshire was the sole bidder.

The current camera van #112 is a 2002 Ford E450 with 50,000 miles and has reached the end of its life with regards to frame and structural integrity. The frame was found to be perforated last September during the state inspection cycle, and temporary repairs were made. Corrosion and age have made this vehicle problematic and unreliable.

The proposed 2017 M2 106 Medium Duty Camera Van will be equipped with a 6 cylinder diesel engine, automatic transmission, heat and air conditioning and an aluminum 20 foot box van body to house the proposed pipeline inspection camera system and office.

The truck will carry a 2 year warranty.

The engine and aftertreatment system will have a 5 year/100,000 mile warranty.

The transmission will have a 5 year/unlimited mileage warranty.

THE CITY OF NASHUA

Financial Services

Purchasing Department

"The Gate City"

September 28, 2016

INVITATION TO BID

Enclosed Pipeline Inspection Camera Van
IFB1040-102816

The City of Nashua Wastewater Department invites bids from qualified suppliers for one (1) new and unused, model year 2016 or 2017 Enclosed Pipeline Inspection Van. There will not be any vehicle traded in.

INSTRUCTIONS TO BIDDERS:

Bids must be submitted on the Bid Form, in its entirety with **one (1) original and one (1) copy**, in a sealed envelope clearly marked **"Enclosed Pipeline Inspection Camera Van"** and must be received at the Central Purchasing Office, 229 Main Street, Room 128, Nashua, NH 03060 prior to **3:00 PM on Friday, October 28, 2016.** Postmarks or other timestamps will not be accepted in lieu of actual delivery. The contractor can use whatever delivery mechanism it chooses as long as it remains clear that the contractor is responsible for submissions prior to the date and time. Further details are available on the City's web site, www.nashuanh.gov, under Services, Current Bids, document **IFB1040-102816.**

Bids will be opened in public on the due date and time. Results of the bid opening will be posted on the City's web site, under Bid Results, within twenty-four (24) hours of the opening. Bids must be submitted in the format provided and address the items specified in the bid package. The City of Nashua may reject any or all of the bids on any basis and without disclosure of a reason. The failure to make such a disclosure shall not result in accrual of any right, claim or cause of action by any unsuccessful bidder against the City of Nashua.

All bids are binding for sixty (60) days after bid opening. The City is exempt of all taxes. All bids must be FOB delivered, Nashua Transit System (NTS), 11 Riverside Street, Nashua, NH 03062.

Pursuant to NRO 5-71 (A), the City of Nashua supports the concept of purchasing products which are biodegradable, can be or have been recycled, or are environmentally sound. Due consideration will be given to the purchase of such products. If you are bidding on any such products which qualify, please so indicate in a cover sheet by item number and description.

Pursuant to NRO 5-78 (F), the purchasing manager shall not solicit a bid from a contractor who is in default on the payment of taxes, licenses or other monies due the city. Therefore, this bid request is void as to anyone who is in default on said payments.

Questions on this Invitation for Bid must be submitted in writing to:

John Stewart
Fleet Manager, City of Nashua
StewartJ@NashuaNH.gov

Respectfully,

Danielle Greenberg
Purchasing Agent II
City of Nashua
greenberod@nashuanh.gov

229 Main Street • Nashua, New Hampshire 03061 • Phone (603) 589-3330 • Fax (603) 589-3233

Minimum Specifications for an Enclosed Pipeline Inspection Camera Van

General

The Pipeline Inspection Van is used by the Wastewater Department for inspection of sanitary sewer lines as well as storm water drain lines throughout the City of Nashua. This van will carry a video camera inspection system comprised of a work station desk with multiple video cameras, tool boxes, video monitors, computers, reels of cable and transporters for the cameras.

1. Manufactures must list the exact specifications for the piece of equipment they are bidding for in each of the categories listed. If any additional information is to be supplied regarding any items, the manufacturers should refer to the number beside the item and type his information on blank pages. Failure to respond to any item may be cause for the bid to be rejected as "non-responsive".

2. Manufacturers are encouraged to elaborate on any aspect of their machine not listed in the bid specifications but such explanations should be typed on a blank sheet of paper.

3. Inclusion of manufacturer's specifications will not be considered as a substitute for filling in the specifications. It is encouraged that the manufacturers bid be supplemented by their printed literature.

4. Equipment bid must be new and unused and manufactured in current model year, and be the manufacturer's latest model.

A. Minimum Specifications

1. 6 Cylinder Turbocharged Diesel engine, 240 HP minimum. Yes
2. Engine must be EPA Tier 4 Emissions. Yes
3. 13 Gallon Diesel Exhaust Fluid Tank. Yes
4. Allison 2200RDS Automatic transmission. Yes
5. Rear axle ratio of 3.91. yes
6. A 216" Wheel Base shall be standard. Yes
7. 25,500 Pound Gross Vehicle Weight Rating Yes

B. Engine Equipment

8. Alternator shall be 12 Volt rated at a minimum of 270 AMPs. Yes
9. Truck shall have 2 Group 31 threaded stud maintenance free batteries. Yes
10. Positive load disconnect switch cab mounted outboard driver's seat. Yes
11. Positive and negative posts for jump starts located on frame near starter. yes

229 Main Street • Nashua, New Hampshire 03061 • Phone (603) 589-3330 • Fax (603) 589-3233

12. 950 square inch radiator minimum. Yes

13. Gates Blue Strip Hoses or equivalent. yes

14. 750 Watt 120 Volt Block Heater. yes

15. Delco 29MT Starter. yes

C. Transmission Equipment

16. Allison 2200RDS 5 speed automatic transmission. yes

17. Water to oil transmission cooler to be in radiator end tank. yes

D. Axle and Air Brake Configurations.

18. Front axle shall be rated at 10,000 LBS. yes

19. Front brakes shall be 15x5 Q+ Meritor with non-asbestos linings. yes

20. Meritor automatic slack adjustors shall be standard. yes

21. TRW THP-60 Power steering shall be standard. yes

22. Power steering shall have a 2 quart see through reservoir. yes

23. Truck shall be equipped with a front sway bar standard. yes

24. Rear axle shall be rated at 17,500 LBS. yes

25. 3.91 rear axle ratio standard. yes

26. Driver controlled traction differential shall be standard. yes

27. Meritor Q+ 15x8.62 rear brakes with non-asbestos linings. yes

28. Brake cams and chambers to be on front side of rear axle. yes

29. Meritor automatic slack adjusters on rear axle brakes. yes

30. Synthetic 75W90 Rear Axle Lube standard. yes

31. Shock absorbers on both axles will be standard. yes

32. Aluminum air tanks shall be standard. yes

229 Main Street • Nashua, New Hampshire 03061 • Phone (603) 589-3330 • Fax (603) 589-3233

E. Frame Specifications

33. 90" Rear frame overhang.
    Frame overhang range 81 to 90 inch.
    Calculated back of cab to rear suspension C/L: 150.45 inch
    Calculated effective back of cab to rear suspension C/L: 147.45
    Calculated frame length- overall: 335.39
    Calculated space available for deckplate 150.45 inch — Yes

34. Painted front bumper with collapsible ends. — Yes

35. Frame mounted front tow hooks. — yes

F. Fuel Tanks

36. 80 Gallon aluminum fuel tank standard. — yes

G. Tires

37. Michelin 245/70R19.5 16 Ply Radial Front Steer Tires. — Yes

38. Michelin 245/70R19.5 16 Ply Radial Rear Snow Tires. — yes

39. Accuride 29195 19.5x7.5 10 Hub Pilot 5.96 Inset 5 hand hole front wheels. — Yes

40. Accuride 29195 19.5x7.5 10 Hub Pilot 5 hand steel disc rear wheels. — yes

41. Conmet Preset Plus Iron Hubs on Front and Rear. — yes

H. Cab

42. Cab shall be made of aluminum. — yes

43. Exterior grab handles on LH and RH will be standard. — yes

44. Dual 24" Aluminum air horns mounted on the cab roof. — Yes

45. Dual west coast heated mirrors mounted on doors with LH and RH remote. — Yes

46. 102" Equipment width mirrors. — Yes

47. RH down view mirror — Yes

48. LH and RH 8 inch stainless convex mirrors mounted under primary mirrors. — Yes

49. LH and RH 8 inch stainless steel fender mounted convex mirrors mounted

229 Main Street • Nashua, New Hampshire 03061 • Phone (603) 589-3330 • Fax (603) 589-3233

on stainless steel tripods. Yes

50. Cab shall have standard Air Conditioning and Heat. Yes

51. Driver and Passenger seats shall be Premium High Back Air Suspension style covered in a heavy duty cloth fabric . Yes

52. Gauges shall be standard factory gauges. Yes

53. Truck shall be equipped with a self-adjusting Back Up alarm. Yes

54. Radio shall be AM/FM with CD player. w/ Blueboth Yes

55. 2 on/off rocker switches in the dash with indicator lights and wire routed to back of cab labeled opt.

I. Body

56. Body shall be an Aluminum Dry Freight body 20 foot long, 8 foot wide. Yes

57. Interior dimensions shall be 85"H x 243"L x 93"W. Yes

58. Rear doors shall be "Barn Doors", 88"W X 78" H. yes

59. Body floor shall be smooth 1 1/8" hardwood, fastened to subframe with 2 counter-sunk screws per floor board per crossmember in a staggered pattern. yes

60. Body floor boards shall be undercoated. yes

61. Threshold shall be steel galvanized angle flush to rear. yes

62. Interior rear body shall be free of tie downs or load strapping or covering on the walls. yes

63. Roof shall be one piece aluminum, .032 thick with anti-sag roof bows on 24" centers with crowned roof design. yes

64. Full width drop step for under-ride protection with pooched 10" step surface. yes

65. 10" Dock extension consisting of steel diamond plate formed cover over a hardwood Filler painted black. yes

66. Aluminum grab handles mounted on LH and RH rear of body. yes

67. All lighting shall meet Federal Motor Vehicle Safety Standards. yes

229 Main Street • Nashua, New Hampshire 03061 • Phone (603) 589-3330 • Fax (603) 589-3233

Minimum Specifications for an Enclosed Pipeline Inspection Camera Van

J. Warranties

68. Engine shall have a 5 year, 100,000 mile warranty. Yes

69. After-treatment system shall have a 5 year, 100,000 mile warranty. Yes

70. Transmission shall have a 5 year unlimited mile warranty. Yes

K. Manuals

71. Repair manuals shall be provided. Yes

72. Online website subscription shall be included for engine diagnostics. Yes

L. Transportation

73. Winning vendor shall incur all expenses to transport the chassis to the body installation vendor and to the camera installation vendor in Mt Sterling, Kentucky. Yes

M. Vehicle color

74. Color of cab and body shall be dark blue. Yes

229 Main Street • Nashua, New Hampshire 03061 • Phone (603) 589-3330 • Fax (603) 589-3233

Prepared for:
John Stewart
State of NH (City of Nashua)
229 Main St
Nashua, NH 03061
Phone: 603-589-4714

Prepared by:
Bryan Sansouci
FREIGHTLINER OF NEW HAMPSHIRE, INC.
ROUTE 102
LONDONDERRY, NH 03053
Phone: 603-421-9000

A proposal for
State of NH (City of Nashua)

Prepared by
FREIGHTLINER OF NEW HAMPSHIRE, INC.
Bryan Sansouci

Oct 26, 2016

Freightliner M2 106

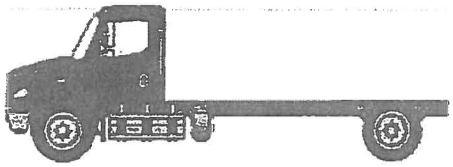

Components shown may not reflect all spec'd options and are not to scale

Prepared for:
John Stewart
State of NH (City of Nashua)
229 Main St
Nashua, NH 03061
Phone: 603-589-4714

Prepared by:
Bryan Sansouci
FREIGHTLINER OF NEW HAMPSHIRE, INC.
ROUTE 102
LONDONDERRY, NH 03053
Phone: 603-421-9000

SPECIFICATION PROPOSAL

Data Code	Description	Weight Front	Weight Rear	Retail Price
Price Level				
PRL-14M	M2 PRL-14M (EFF:10/05/15)			N/C
Data Version				
DRL-001	SPECPRO21 DATA RELEASE VER 001			N/C
Vehicle Configuration				
001-172	M2 106 CONVENTIONAL CHASSIS	5,759	3,503	$98,616.00
004-217	2017 MODEL YEAR SPECIFIED			STD
002-004	SET BACK AXLE - TRUCK			STD
019-002	STRAIGHT TRUCK PROVISION			STD
003-001	LH PRIMARY STEERING LOCATION			STD
General Service				
AA1-002	TRUCK CONFIGURATION			STD
AA6-002	DOMICILED, USA (EXCLUDING CALIFORNIA AND CARB OPT-IN STATES)			STD
A85-002	PICKUP AND DELIVERY/SHORT HAUL SERVICE			STD
A84-1GM	GOVERNMENT BUSINESS SEGMENT			N/C
AA4-011	FIXED LOAD COMMODITY			N/C
AA5-002	TERRAIN/DUTY: 100% (ALL) OF THE TIME, IN TRANSIT, IS SPENT ON PAVED ROADS			STD
AB1-008	MAXIMUM 8% EXPECTED GRADE			STD
AB5-001	SMOOTH CONCRETE OR ASPHALT PAVEMENT - MOST SEVERE IN-TRANSIT (BETWEEN SITES) ROAD SURFACE			STD
995-091	MEDIUM TRUCK WARRANTY			STD
A66-99D	EXPECTED FRONT AXLE(S) LOAD : 8000.0 lbs			
A68-99D	EXPECTED REAR DRIVE AXLE(S) LOAD : 17500.0 lbs			
A67-99D	EXPECTED PUSHER AXLE(S) LOAD : 0.0 lbs			
A63-99D	EXPECTED GROSS VEHICLE WEIGHT CAPACITY : 25500.0 lbs			
Truck Service				

Prepared for:
John Stewart
State of NH (City of Nashua)
229 Main St
Nashua, NH 03061
Phone: 603-589-4714

Prepared by:
Bryan Sansouci
FREIGHTLINER OF NEW HAMPSHIRE, INC.
ROUTE 102
LONDONDERRY, NH 03053
Phone: 603-421-9000

Data Code	Description	Weight Front	Weight Rear	Retail Price
AA3-001	DRY VAN BODY			STD
AF7-99D	EXPECTED BODY/PAYLOAD CG HEIGHT ABOVE FRAME "XX" INCHES : 32.0 in			
Engine				
101-2GD	CUM ISB 6.7-240 240 HP @ 2300 RPM, 2600 GOV, 560 LB/FT @ 1600 RPM			$1,954.00
Electronic Parameters				
79A-072	72 MPH ROAD SPEED LIMIT			N/C
79B-000	CRUISE CONTROL SPEED LIMIT SAME AS ROAD SPEED LIMIT			N/C
79K-007	PTO MODE ENGINE RPM LIMIT - 1100 RPM			N/C
79P-002	PTO RPM WITH CRUISE SET SWITCH - 700 RPM			N/C
79Q-003	PTO RPM WITH CRUISE RESUME SWITCH - 800 RPM			N/C
79S-001	PTO MODE CANCEL VEHICLE SPEED - 5 MPH			N/C
79U-007	PTO GOVERNOR RAMP RATE - 250 RPM PER SECOND			N/C
80G-002	PTO MINIMUM RPM - 700			N/C
80J-002	REGEN INHIBIT SPEED THRESHOLD - 5 MPH			N/C
Engine Equipment				
99C-016	2016 ONBOARD DIAGNOSTICS/2010 EPA/CARB/GHG17 BUT NOT FINAL GHG17 CONFIGURATION			STD
99D-010	NO 2008 CARB EMISSION CERTIFICATION			N/C
13E-001	STANDARD OIL PAN			STD
105-001	ENGINE MOUNTED OIL CHECK AND FILL			STD
133-004	ONE PIECE VALVE COVER			STD
014-099	SIDE OF HOOD AIR INTAKE WITH FIREWALL MOUNTED DONALDSON AIR CLEANER			STD
124-1CC	LN 12V 270 AMP 4949PGH PAD MOUNT ALTERNATOR WITH AC TAPS	10		$832.00
292-098	(2) ALLIANCE MODEL 1231, GROUP 31, 12 VOLT MAINTENANCE FREE 2250 CCA THREADED STUD BATTERIES			$41.00
290-1CD	BATTERY BOX WITH ALUMINUM COVER MOUNTED SHORT SIDE TO RAIL			$245.00
281-001	STANDARD BATTERY JUMPERS			STD
282-003	SINGLE BATTERY BOX FRAME MOUNTED LH SIDE BACK OF CAB			N/C
291-017	WIRE GROUND RETURN FOR BATTERY CABLES WITH ADDITIONAL FRAME GROUND RETURN			STD

Prepared for:
John Stewart
State of NH (City of Nashua)
229 Main St
Nashua, NH 03061
Phone: 603-589-4714

Prepared by:
Bryan Sansouci
FREIGHTLINER OF NEW HAMPSHIRE, INC.
ROUTE 102
LONDONDERRY, NH 03053
Phone: 603-421-9000

Data Code	Description	Weight Front	Weight Rear	Retail Price
289-001	NON-POLISHED BATTERY BOX COVER			STD
293-058	POSITIVE LOAD DISCONNECT WITH CAB MOUNTED CONTROL SWITCH MOUNTED OUTBOARD DRIVER SEAT	8		$240.00
295-029	POSITIVE AND NEGATIVE POSTS FOR JUMPSTART LOCATED ON FRAME NEXT TO STARTER	2		$111.00
107-032	CUMMINS TURBOCHARGED 18.7 CFM AIR COMPRESSOR WITH INTERNAL SAFETY VALVE			STD
108-002	STANDARD MECHANICAL AIR COMPRESSOR GOVERNOR			STD
131-013	AIR COMPRESSOR DISCHARGE LINE			STD
152-041	ELECTRONIC ENGINE INTEGRAL SHUTDOWN PROTECTION SYSTEM			STD
128-076	CUMMINS EXHAUST BRAKE INTEGRAL WITH VARIABLE GEOMETRY TURBO WITH ON/OFF DASH SWITCH	20		$14.00
016-1C3	RH OUTBOARD UNDER STEP MOUNTED HORIZONTAL AFTERTREATMENT SYSTEM ASSEMBLY WITH RH HORIZONTAL TAILPIPE			STD
28F-002	ENGINE AFTERTREATMENT DEVICE, AUTOMATIC OVER THE ROAD REGENERATION AND DASH MOUNTED REGENERATION REQUEST SWITCH			STD
239-001	STANDARD EXHAUST SYSTEM LENGTH			STD
237-052	RH STANDARD HORIZONTAL TAILPIPE			STD
23U-002	13 GALLON DIESEL EXHAUST FLUID TANK	35	10	$105.00
30N-003	100 PERCENT DIESEL EXHAUST FLUID FILL			$17.00
43X-002	LH MEDIUM DUTY STANDARD DIESEL EXHAUST FLUID TANK LOCATION			STD
23Y-001	STANDARD DIESEL EXHAUST FLUID PUMP MOUNTING			STD
43Y-001	STANDARD DIESEL EXHAUST FLUID TANK CAP			STD
273-035	HORTON HT650 FRONTAL AIR ON/OFF ENGINE FAN CLUTCH			STD
276-001	AUTOMATIC FAN CONTROL WITHOUT DASH SWITCH, NON ENGINE MOUNTED			STD
110-003	CUMMINS SPIN ON FUEL FILTER			STD
118-001	FULL FLOW OIL FILTER			STD
266-078	950 SQUARE INCH ALUMINUM RADIATOR			STD
103-039	ANTIFREEZE TO -34F, OAT (NITRITE AND SILICATE FREE) EXTENDED LIFE COOLANT			STD
171-007	GATES BLUE STRIPE COOLANT HOSES OR EQUIVALENT			STD

Prepared for:
John Stewart
State of NH (City of Nashua)
229 Main St
Nashua, NH 03061
Phone: 603-589-4714

Prepared by:
Bryan Sansouci
FREIGHTLINER OF NEW HAMPSHIRE, INC.
ROUTE 102
LONDONDERRY, NH 03053
Phone: 603-421-9000

Data Code	Description	Weight Front	Weight Rear	Retail Price
172-007	GATES POWERGRIP SHRINK BAND HOSE CLAMPS WHERE POSSIBLE			$141.00
270-016	RADIATOR DRAIN VALVE			STD
168-002	LOWER RADIATOR GUARD			STD
138-010	PHILLIPS-TEMRO 750 WATT/115 VOLT BLOCK HEATER	4		$108.00
140-022	CHROME ENGINE HEATER RECEPTACLE MOUNTED UNDER LH DOOR			$14.00
134-001	ALUMINUM FLYWHEEL HOUSING			STD
132-004	ELECTRIC GRID AIR INTAKE WARMER			STD
155-057	DELCO 12V 29MT STARTER WITH INTEGRATED MAGNETIC SWITCH			STD
Transmission				
342-1MM	ALLISON 2200 RDS AUTOMATIC TRANSMISSION WITH PARK PAWL WITH PTO PROVISION			$859.00
Transmission Equipment				
343-301	ALLISON VOCATIONAL PACKAGE 354 - AVAILABLE ON 1000/2000 PRODUCT FAMILIES WITH VOCATIONAL MODELS RDS, EVS, HS, MH, PTS AND SPS			STD
84B-012	ALLISON VOCATIONAL RATING FOR ON/OFF HIGHWAY APPLICATIONS AVAILABLE WITH ALL PRODUCT FAMILIES			N/C
84C-003	PRIMARY MODE GEARS, 5 FORWARD GEARS WITH MANUAL SELECTION FOR 3, 2 AND 1, AVAILABLE FOR 1000/2000 PRODUCT FAMILIES ONLY			STD
84E-000	PRIMARY SHIFT SCHEDULE RECOMMENDED BY DTNA AND ALLISON, THIS DEFINED BY ENGINE AND VOCATIONAL USAGE			STD
84F-000	SECONDARY SHIFT SCHEDULE RECOMMENDED BY DTNA AND ALLISON, THIS DEFINED BY ENGINE AND VOCATIONAL USAGE			STD
84G-000	PRIMARY SHIFT SPEED RECOMMENDED BY DTNA AND ALLISON, THIS DEFINED BY ENGINE AND VOCATIONAL USAGE			STD
84H-000	SECONDARY SHIFT SPEED RECOMMENDED BY DTNA AND ALLISON, THIS DEFINED BY ENGINE AND VOCATIONAL USAGE			STD
84L-000	LOAD BASED SHIFT SCHEDULE AND VEHICLE ACCELERATION CONTROL RECOMMENDED BY DTNA AND ALLISON, THIS DEFINED VOCATIONAL USAGE			STD
84N-000	NEUTRAL AT STOP - DISABLED, FUELSENSE - DISABLED			STD

Prepared for:
John Stewart
State of NH (City of Nashua)
229 Main St
Nashua, NH 03061
Phone: 603-589-4714

Prepared by:
Bryan Sansouci
FREIGHTLINER OF NEW HAMPSHIRE, INC.
ROUTE 102
LONDONDERRY, NH 03053
Phone: 603-421-9000

Data Code	Description	Weight Front	Weight Rear	Retail Price
84U-000	DRIVER SWITCH INPUT - DEFAULT - NO SWITCHES			STD
353-023	VEHICLE INTERFACE WIRING CONNECTOR WITHOUT BLUNT CUTS, AT END OF FRAME			$47.00
362-1BU	CUSTOMER INSTALLED CHELSEA 230/231/236 SERIES PTO			N/C
363-001	PTO MOUNTING, LH SIDE OF MAIN TRANSMISSION			N/C
341-018	MAGNETIC PLUGS, ENGINE DRAIN, TRANSMISSION DRAIN, AXLE(S) FILL AND DRAIN			STD
345-074	DASH MOUNTED T-HANDLE CABLE SHIFT CONTROL WITH PARK POSITION FOR INTERNAL PARK PAWL			N/C
97G-006	TRANSMISSION PROGNOSTICS - DISABLED (N/A) 2013, FOR USE IN 1000/2000 ONLY			STD
370-015	WATER TO OIL TRANSMISSION COOLER, IN RADIATOR END TANK			STD
346-001	TRANSMISSION OIL CHECK AND FILL			STD
35T-001	SYNTHETIC TRANSMISSION FLUID (TES-295 COMPLIANT)			STD
Front Axle and Equipment				
400-1A5	DETROIT DA-F-10.0-3 10,000# FF1 71.5 KPI/3.74 DROP SINGLE FRONT AXLE			N/C
402-021	MERITOR 15X5 Q+ CAST SPIDER CAM FRONT BRAKES, DOUBLE ANCHOR, FABRICATED SHOES			$140.00
403-002	NON-ASBESTOS FRONT BRAKE LINING			STD
419-023	CONMET CAST IRON FRONT BRAKE DRUMS			STD
409-021	SKF SCOTSEAL PLUS XL FRONT OIL SEALS			STD
408-001	VENTED FRONT HUB CAPS WITH WINDOW, CENTER AND SIDE PLUGS - OIL			STD
416-022	STANDARD SPINDLE NUTS FOR ALL AXLES			STD
405-002	MERITOR AUTOMATIC FRONT SLACK ADJUSTERS			STD
536-050	TRW THP-60 POWER STEERING			STD
539-003	POWER STEERING PUMP			STD
534-015	2 QUART SEE THROUGH POWER STEERING RESERVOIR			STD
40T-002	SYNTHETIC 75W-90 FRONT AXLE LUBE			$11.00
Front Suspension				
620-032	8,000# TAPERLEAF FRONT SUSPENSION	-30		($33.00)

Prepared for:
John Stewart
State of NH (City of Nashua)
229 Main St
Nashua, NH 03061
Phone: 603-589-4714

Prepared by:
Bryan Sansouci
FREIGHTLINER OF NEW HAMPSHIRE, INC.
ROUTE 102
LONDONDERRY, NH 03053
Phone: 603-421-9000

Data Code	Description	Weight Front	Weight Rear	Retail Price
619-005	MAINTENANCE FREE RUBBER BUSHINGS - FRONT SUSPENSION			STD
62H-998	NO FRONT SUSPENSION SPRING BRACKET OPTIONS			STD
629-004	FRONT SWAYBAR	60		$495.00
410-001	FRONT SHOCK ABSORBERS			STD
Rear Axle and Equipment				
420-1C6	DETROIT DA-RS-17.5-2 17,500# R-SERIES SINGLE REAR AXLE		-170	($360.00)
421-478	4.78 REAR AXLE RATIO			N/C
424-001	IRON REAR AXLE CARRIER WITH STANDARD AXLE HOUSING			STD
386-055	SPL100 DANA SPICER MAIN DRIVELINE WITH HALF ROUND YOKES	15	15	($59.00)
452-001	DRIVER CONTROLLED TRACTION DIFFERENTIAL - SINGLE REAR AXLE		20	$774.00
878-018	(1) DRIVER CONTROLLED DIFFERENTIAL LOCK REAR VALVE FOR SINGLE DRIVE AXLE			N/C
87B-004	BLINKING LAMP WITH EACH MODE SWITCH, DIFFERENTIAL UNLOCK WITH IGNITION OFF, ACTIVE <5 MPH			N/C
423-028	MERITOR 15X8.62 Q+ CAST SPIDER CAM REAR BRAKES, DOUBLE ANCHOR, FABRICATED SHOES		-20	$161.00
433-002	NON-ASBESTOS REAR BRAKE LINING			STD
434-012	BRAKE CAMS AND CHAMBERS ON REAR SIDE OF DRIVE AXLE(S)			N/C
451-023	CONMET CAST IRON REAR BRAKE DRUMS			STD
440-021	SKF SCOTSEAL PLUS XL REAR OIL SEALS			STD
426-074	HALDEX GOLDSEAL LONGSTROKE 1-DRIVE AXLE SPRING PARKING CHAMBERS			STD
428-002	MERITOR AUTOMATIC REAR SLACK ADJUSTERS			STD
41T-002	SYNTHETIC 75W-90 REAR AXLE LUBE			$90.00
Rear Suspension				
622-002	20,000# FLAT LEAF SPRING REAR SUSPENSION WITH RADIUS ROD		40	($1,323.00)
621-004	SPRING SUSPENSION - 1.50" AXLE SPACER		10	$46.00
431-001	STANDARD AXLE SEATS IN AXLE CLAMP GROUP			STD
623-005	FORE/AFT CONTROL RODS			N/C
Brake System				

Prepared for:
John Stewart
State of NH (City of Nashua)
229 Main St
Nashua, NH 03061
Phone: 603-589-4714

Prepared by:
Bryan Sansouci
FREIGHTLINER OF NEW HAMPSHIRE, INC.
ROUTE 102
LONDONDERRY, NH 03053
Phone: 603-421-9000

Data Code	Description	Weight Front	Weight Rear	Retail Price
018-002	AIR BRAKE PACKAGE			STD
490-100	WABCO 4S/4M ABS WITHOUT TRACTION CONTROL			STD
871-001	REINFORCED NYLON, FABRIC BRAID AND WIRE BRAID CHASSIS AIR LINES			STD
904-001	FIBER BRAID PARKING BRAKE HOSE			STD
412-001	STANDARD BRAKE SYSTEM VALVES			STD
46D-002	STANDARD AIR SYSTEM PRESSURE PROTECTION SYSTEM			STD
413-002	STD U.S. FRONT BRAKE VALVE			STD
432-003	RELAY VALVE WITH 5-8 PSI CRACK PRESSURE, NO REAR PROPORTIONING VALVE			STD
480-083	WABCO SS-1200 PLUS AIR DRYER WITH INTEGRAL AIR GOVERNOR AND HEATER			STD
479-015	AIR DRYER FRAME MOUNTED			STD
460-007	ALUMINUM AIR BRAKE RESERVOIRS	-5	-5	$167.00
477-004	PULL CABLES ON ALL AIR RESERVOIR(S)			$3.00
Trailer Connections				
335-004	UPGRADED CHASSIS MULTIPLEXING UNIT			STD
32A-002	UPGRADED BULKHEAD MULTIPLEXING UNIT			STD
30L-998	NO HIGH CURRENT TRAILER/BODY CABLE			STD
Wheelbase & Frame				
545-547	5475MM (216 INCH) WHEELBASE			N/C
546-094	9/32X3-7/16X10-1/16 INCH STEEL FRAME (7.14MMX255.6/0.281X10.06 INCH) 80KSI	140	-10	$269.00
552-054	2275MM (90 INCH) REAR FRAME OVERHANG			N/C
55W-008	FRAME OVERHANG RANGE: 81 INCH TO 90 INCH	-20	110	N/C
AC8-99D	CALC'D BACK OF CAB TO REAR SUSP C/L (CA) : 150.45 in			
AE8-99D	CALCULATED EFFECTIVE BACK OF CAB TO REAR SUSPENSION C/L (CA) : 147.45 in			
AE4-99D	CALC'D FRAME LENGTH - OVERALL : 335.39			
AM6-99D	CALC'D SPACE AVAILABLE FOR DECKPLATE : 150.45 in			
FSS-0LH	CALCULATED FRAME SPACE LH SIDE : 102.5 in			N/C
FSS-0RH	CALCULATED FRAME SPACE RH SIDE : 159.82 in			N/C
553-001	SQUARE END OF FRAME			STD
550-001	FRONT CLOSING CROSSMEMBER			STD

Prepared for:
John Stewart
State of NH (City of Nashua)
229 Main St
Nashua, NH 03061
Phone: 603-589-4714

Prepared by:
Bryan Sansouci
FREIGHTLINER OF NEW HAMPSHIRE, INC.
ROUTE 102
LONDONDERRY, NH 03053
Phone: 603-421-9000

Data Code	Description	Weight Front	Weight Rear	Retail Price
559-001	STANDARD WEIGHT ENGINE CROSSMEMBER			STD
562-001	STANDARD MIDSHIP #1 CROSSMEMBER(S)			STD
572-001	STANDARD REARMOST CROSSMEMBER			STD
565-001	STANDARD SUSPENSION CROSSMEMBER			STD
Chassis Equipment				
556-1AP	THREE-PIECE 14 INCH PAINTED STEEL BUMPER WITH COLLAPSIBLE ENDS	30		$76.00
558-001	FRONT TOW HOOKS - FRAME MOUNTED	15		$96.00
574-001	BUMPER MOUNTING FOR SINGLE LICENSE PLATE			STD
586-024	FENDER AND FRONT OF HOOD MOUNTED FRONT MUDFLAPS			STD
551-007	GRADE 8 THREADED HEX HEADED FRAME FASTENERS			STD
Fuel Tanks				
204-034	80 GALLON/302 LITER RECTANGULAR ALUMINUM FUEL TANK - LH	40	10	$213.00
218-005	RECTANGULAR FUEL TANK(S)			STD
215-005	PLAIN ALUMINUM/PAINTED STEEL FUEL/HYDRAULIC TANK(S) WITH PAINTED BANDS			STD
212-007	FUEL TANK(S) FORWARD			STD
664-003	BLACK STEP FINISH			$16.00
205-001	FUEL TANK CAP(S)			STD
122-084	ALLIANCE FUEL FILTER/WATER SEPARATOR WITH PRIMER PUMP			STD
216-020	EQUIFLO INBOARD FUEL SYSTEM			STD
202-016	HIGH TEMPERATURE REINFORCED NYLON FUEL LINE			STD
Tires				
093-0E5	MICHELIN XZE 245/70R19.5 16 PLY RADIAL FRONT TIRES	-82		($348.00)
094-1FT	MICHELIN XDS2 245/70R19.5 16 PLY RADIAL REAR TIRES		-144	($412.00)
Hubs				
418-056	CONMET PRESET PLUS IRON FRONT HUBS			STD
450-056	CONMET PRESET PLUS IRON REAR HUBS			STD
Wheels				
502-440	ACCURIDE 29195 19.5X7.50 10-HUB PILOT 5.96 INSET 5-HAND STEEL DISC FRONT WHEELS	-10		$106.00

Prepared for:
John Stewart
State of NH (City of Nashua)
229 Main St
Nashua, NH 03061
Phone: 603-589-4714

Prepared by:
Bryan Sansouci
FREIGHTLINER OF NEW HAMPSHIRE, INC.
ROUTE 102
LONDONDERRY, NH 03053
Phone: 603-421-9000

Data Code	Description	Weight Front	Weight Rear	Retail Price
505-440	ACCURIDE 29195 19.5X7.50 10-HUB PILOT 5-HAND STEEL DISC REAR WHEELS		-20	$212.00
496-011	FRONT WHEEL MOUNTING NUTS			STD
497-011	REAR WHEEL MOUNTING NUTS			STD
Cab Exterior				
829-071	106 INCH BBC FLAT ROOF ALUMINUM CONVENTIONAL CAB			STD
650-008	AIR CAB MOUNTS			$118.00
678-018	LH AND RH EXTERIOR GRAB HANDLES WITH SINGLE RUBBER INSERT			$73.00
646-023	HOOD MOUNTED CHROMED PLASTIC GRILLE			$97.00
65X-003	CHROME HOOD MOUNTED AIR INTAKE GRILLE			$50.00
644-004	FIBERGLASS HOOD			STD
690-007	HOOD LINER INSULATION WITH SINGLE FIREWALL INSULATION			$114.00
727-1AM	DUAL 24 INCH ROUND POLISHED ALUMINUM AIR HORNS ROOF MOUNTED	8		$196.00
726-002	DUAL ELECTRIC HORNS			$10.00
728-002	DUAL HORN SHIELDS			N/C
657-1A0	ALL UNIT(S) KEYED ALIKE WITH CUSTOMER SPECIFIED KEY NUMBER FT1013			$43.00
575-001	REAR LICENSE PLATE MOUNT END OF FRAME			STD
312-038	INTEGRAL HEADLIGHT/MARKER ASSEMBLY WITH CHROME BEZEL			N/C
302-047	LED AERODYNAMIC MARKER LIGHTS			$37.00
311-001	DAYTIME RUNNING LIGHTS			$21.00
294-001	INTEGRAL STOP/TAIL/BACKUP LIGHTS			STD
300-015	STANDARD FRONT TURN SIGNAL LAMPS			STD
744-1BC	DUAL WEST COAST BRIGHT FINISH HEATED MIRRORS WITH LH AND RH REMOTE			$330.00
797-001	DOOR MOUNTED MIRRORS			STD
796-001	102 INCH EQUIPMENT WIDTH			STD
743-204	LH AND RH 8 INCH BRIGHT FINISH CONVEX MIRRORS MOUNTED UNDER PRIMARY MIRRORS			N/C
74A-001	RH DOWN VIEW MIRROR			$23.00
74B-080	RH AND LH 8 INCH STAINLESS STEEL FENDER MOUNTED CONVEX MIRRORS WITH TRIPOD BRACKETS	8		$156.00
729-001	STANDARD SIDE/REAR REFLECTORS			STD

Prepared for:
John Stewart
State of NH (City of Nashua)
229 Main St
Nashua, NH 03061
Phone: 603-589-4714

Prepared by:
Bryan Sansouci
FREIGHTLINER OF NEW HAMPSHIRE, INC.
ROUTE 102
LONDONDERRY, NH 03053
Phone: 603-421-9000

Data Code	Description	Weight Front	Weight Rear	Retail Price
677-016	DUAL LEVEL CAB ENTRY STEPS ON BOTH SIDES			N/C
768-043	63X14 INCH TINTED REAR WINDOW			STD
661-004	TINTED DOOR GLASS LH AND RH WITH TINTED OPERATING WING WINDOWS			$157.00
654-003	MANUAL DOOR WINDOW REGULATORS			STD
663-013	TINTED WINDSHIELD			STD
659-019	2 GALLON WINDSHIELD WASHER RESERVOIR WITHOUT FLUID LEVEL INDICATOR, FRAME MOUNTED			STD
Cab Interior				
707-1AK	OPAL GRAY VINYL INTERIOR			N/C
706-026	MOLDED PLASTIC DOOR PANEL WITHOUT VINYL INSERT WITH ALUMINUM KICKPLATE LOWER DOOR			$25.00
708-026	MOLDED PLASTIC DOOR PANEL WITHOUT VINYL INSERT WITH ALUMINUM KICKPLATE LOWER DOOR			$25.00
772-006	BLACK MATS WITH SINGLE INSULATION			STD
691-008	FORWARD ROOF MOUNTED CONSOLE WITH UPPER STORAGE COMPARTMENTS WITHOUT NETTING			STD
694-010	IN DASH STORAGE BIN			STD
742-007	(2) CUP HOLDERS LH AND RH DASH			STD
680-006	GRAY/CHARCOAL FLAT DASH			STD
720-002	2-1/2 LB. FIRE EXTINGUISHER	5		$40.00
700-002	HEATER, DEFROSTER AND AIR CONDITIONER			STD
701-001	STANDARD HVAC DUCTING			STD
703-005	MAIN HVAC CONTROLS WITH RECIRCULATION SWITCH			STD
170-015	STANDARD HEATER PLUMBING			STD
130-033	DENSO HEAVY DUTY AIR CONDITIONER COMPRESSOR			STD
702-002	BINARY CONTROL, R-134A			STD
739-033	STANDARD INSULATION			STD
285-013	SOLID-STATE CIRCUIT PROTECTION AND FUSES			STD
280-007	12V NEGATIVE GROUND ELECTRICAL SYSTEM			STD
324-014	DOME LIGHT WITH 3-WAY SWITCH ACTIVATED BY LH AND RH DOORS			STD
655-001	CAB DOOR LATCHES WITH MANUAL DOOR LOCKS			STD

Prepared for:
John Stewart
State of NH (City of Nashua)
229 Main St
Nashua, NH 03061
Phone: 603-589-4714

Prepared by:
Bryan Sansouci
FREIGHTLINER OF NEW HAMPSHIRE, INC.
ROUTE 102
LONDONDERRY, NH 03053
Phone: 603-421-9000

Data Code	Description	Weight Front	Weight Rear	Retail Price
284-023	(1) 12 VOLT POWER SUPPLY IN DASH			$16.00
722-002	TRIANGULAR REFLECTORS WITHOUT FLARES	10		$25.00
756-1D9	PREMIUM HIGH BACK AIR SUSPENSION DRIVER SEAT WITH 3 CHAMBER AIR LUMBAR, INTEGRATED CUSHION EXTENSION, FORWARD AND REAR CUSHION TILT, ADJUSTABLE SHOCK ABSORBER	70		$418.00
760-1D9	PREMIUM HIGH BACK AIR SUSPENSION PASSENGER SEAT WITH 3 CHAMBER AIR LUMBAR, INTEGRATED CUSHION EXTENSION,FORWARD AND REAR CUSHION TILT, ADJUSTABLE SHOCK ABSORBER	60	20	$468.00
759-007	DUAL DRIVER SEAT ARMRESTS, NO PASSENGER SEAT ARMRESTS	4		$69.00
711-004	LH AND RH INTEGRAL DOOR PANEL ARMRESTS			STD
758-022	BLACK MORDURA CLOTH DRIVER SEAT COVER			$25.00
761-023	BLACK MORDURA CLOTH PASSENGER SEAT COVER			$25.00
763-102	HIGH VISIBILITY ORANGE SEAT BELTS			$26.00
532-002	ADJUSTABLE TILT AND TELESCOPING STEERING COLUMN	10		$478.00
540-015	4-SPOKE 18 INCH (450MM) STEERING WHEEL			STD
765-002	DRIVER AND PASSENGER INTERIOR SUN VISORS			STD
Instruments & Controls				
732-004	GRAY DRIVER INSTRUMENT PANEL			STD
734-004	GRAY CENTER INSTRUMENT PANEL			STD
870-001	BLACK GAUGE BEZELS			STD
486-001	LOW AIR PRESSURE INDICATOR LIGHT AND AUDIBLE ALARM			STD
840-002	2 INCH PRIMARY AND SECONDARY AIR PRESSURE GAUGES			STD
198-025	INTAKE MOUNTED AIR RESTRICTION INDICATOR WITHOUT GRADUATIONS			STD
721-003	PRECO 1040 87 DB TO 112 DB AUTOMATIC SELF-ADJUSTING BACKUP ALARM		3	$104.00
149-013	ELECTRONIC CRUISE CONTROL WITH SWITCHES IN LH SWITCH PANEL			STD
156-007	KEY OPERATED IGNITION SWITCH AND INTEGRAL START POSITION; 4 POSITION OFF/RUN/START/ACCESSORY			STD
811-042	ICU3S, 132X48 DISPLAY WITH DIAGNOSTICS, 28 LED WARNING LAMPS AND DATA LINKED			STD

Prepared for:
John Stewart
State of NH (City of Nashua)
229 Main St
Nashua, NH 03061
Phone: 603-589-4714

Prepared by:
Bryan Sansouci
FREIGHTLINER OF NEW HAMPSHIRE, INC.
ROUTE 102
LONDONDERRY, NH 03053
Phone: 603-421-9000

Data Code	Description	Weight Front	Weight Rear	Retail Price
160-038	HEAVY DUTY ONBOARD DIAGNOSTICS INTERFACE CONNECTOR LOCATED BELOW LH DASH			STD
844-001	2 INCH ELECTRIC FUEL GAUGE			STD
148-003	PROGRAMMABLE RPM CONTROL - ELECTRONIC ENGINE			STD
856-001	ELECTRICAL ENGINE COOLANT TEMPERATURE GAUGE			STD
864-005	TRANSMISSION OIL TEMPERATURE INDICATOR LIGHT			STD
830-017	ENGINE AND TRIP HOUR METERS INTEGRAL WITHIN DRIVER DISPLAY			STD
372-051	CUSTOMER FURNISHED AND INSTALLED PTO CONTROLS			N/C
73B-998	NO LANE DEPARTURE WARNING SYSTEM			STD
852-002	ELECTRIC ENGINE OIL PRESSURE GAUGE			STD
746-1B3	AM/FM/WB RADIO WITH BLUETOOTH AND MICROPHONE, FRONT USB PORT, FRONT AND REAR AUXILIARY INPUTS AND J1939	10		$398.00
747-001	DASH MOUNTED RADIO			N/C
750-002	(2) RADIO SPEAKERS IN CAB			N/C
753-001	AM/FM ANTENNA MOUNTED ON FORWARD LH ROOF	2		N/C
74D-002	RADIO WIRING WITH POWER CUTOFF WHEN VEHICLE IN REVERSE GEAR			$8.00
810-027	ELECTRONIC MPH SPEEDOMETER WITH SECONDARY KPH SCALE, WITHOUT ODOMETER			STD
817-001	STANDARD VEHICLE SPEED SENSOR			STD
812-001	ELECTRONIC 3000 RPM TACHOMETER			STD
8D1-998	NO DIRECT CONNECT			STD
162-011	IDLE LIMITER, ELECTRONIC ENGINE			STD
329-010	TWO ON/OFF ROCKER SWITCHES IN THE DASH WITH INDICATOR LIGHTS AND WIRE ROUTED TO CHASSIS AT BACK OF CAB, LABEL OPT			$63.00
836-015	DIGITAL VOLTAGE DISPLAY INTEGRAL WITH DRIVER DISPLAY			STD
660-025	SINGLE ELECTRIC WINDSHIELD WIPER MOTOR WITH DELAY PROGRAMMED TO SLOWEST SPEED WITH PARK BRAKE SET			$22.00
304-001	MARKER LIGHT SWITCH INTEGRAL WITH HEADLIGHT SWITCH			STD
882-009	ONE VALVE PARKING BRAKE SYSTEM WITH WARNING INDICATOR			STD

Prepared for:
John Stewart
State of NH (City of Nashua)
229 Main St
Nashua, NH 03061
Phone: 603-589-4714

Prepared by:
Bryan Sansouci
FREIGHTLINER OF NEW HAMPSHIRE, INC.
ROUTE 102
LONDONDERRY, NH 03053
Phone: 603-421-9000

Data Code	Description	Weight Front	Weight Rear	Retail Price
299-013	SELF CANCELING TURN SIGNAL SWITCH WITH DIMMER, WASHER/WIPER AND HAZARD IN HANDLE			STD
298-039	INTEGRAL ELECTRONIC TURN SIGNAL FLASHER WITH HAZARD LAMPS OVERRIDING STOP LAMPS			STD
869-998	NO MISCELLANEOUS GAUGES			STD
Design				
065-000	PAINT: ONE SOLID COLOR			STD
Color				
980-5A9	CAB COLOR A: L0306EB BLUE ELITE BC			N/C
986-020	BLACK, HIGH SOLIDS POLYURETHANE CHASSIS PAINT			STD
98K-998	NO FUEL TANK CABINET PAINT			STD
962-972	POWDER WHITE (N0006EA) FRONT WHEELS/RIMS (PKWHT21, TKWHT21, W, TW)			STD
966-972	POWDER WHITE (N0006EA) REAR WHEELS/RIMS (PKWHT21, TKWHT21, W, TW)			STD
964-6Z7	BUMPER PAINT: FP24812 ARGENT SILVER DUPONT FLEX			STD
963-003	STANDARD E COAT/UNDERCOATING			STD
Certification / Compliance				
996-001	U.S. FMVSS CERTIFICATION, EXCEPT SALES CABS AND GLIDER KITS			STD
Sales Programs				
	NO SALES PROGRAMS HAVE BEEN SELECTED			

TOTAL VEHICLE SUMMARY

Adjusted List Price

Adjusted List Price ** $107,344.00

Weight Summary

	Weight Front	Weight Rear	Total Weight
Factory Weight+	6178 lbs	3372 lbs	9550 lbs

Prepared for:
John Stewart
State of NH (City of Nashua)
229 Main St
Nashua, NH 03061
Phone: 603-589-4714

Prepared by:
Bryan Sansouci
FREIGHTLINER OF NEW HAMPSHIRE, INC.
ROUTE 102
LONDONDERRY, NH 03053
Phone: 603-421-9000

Dealer Installed Options	0 lbs	0 lbs	0 lbs
Total Weight+	6178 lbs	3372 lbs	9550 lbs

ITEMS NOT INCLUDED IN ADJUSTED LIST PRICE

Other Factory Charges

PMU-016	2016 OBD/2010 EPA/CARB/GHG14 ESCALATOR	$300.00
P73-2FT	STANDARD DESTINATION CHARGE	$2,000.00

Extended Warranty

WAI-4NY	EPA 2013 CUMMINS ISB ENGINE EXTENDED WARRANTY DC1, 5 YEARS/100,000 MILES/160 000 KM FEX	$950.00
WAX-066	EPA 2013 CUMMINS ISB ENGINE EXTENDED WARRANTY AFTERTREATMENT AT3, 5 YEARS/100,000 MILES/160 000 KM FEX	$400.00
WAK-137	ALLISON 2000 RDS SERIES TRANSMISSION EXTENDED WARRANTY, 5 YEARS/UNLIMITED MILES FEX	$631.00
	Currency Exchange Rate	1.0000
	Total Extended Warranty (Local Currency)	$1,981.00

Dealer Installed Options

		Weight Front	Weight Rear	Price
AAA	NH BODY & TRAILER QUOTE #DN-0335845-1	0	0	$10,870.00
	Total Dealer Installed Options	0 lbs	0 lbs	$10,870.00

(+) Weights shown are estimates only.
If weight is critical, contact Customer Application Engineering.
(**) Prices shown do not include taxes, fees, etc... "Net Equipment Selling Price" is located on the Quotation Details Proposal Report.

Prepared for:
John Stewart
State of NH (City of Nashua)
229 Main St
Nashua, NH 03061
Phone: 603-589-4714

Prepared by:
Bryan Sansouci
FREIGHTLINER OF NEW HAMPSHIRE, INC.
ROUTE 102
LONDONDERRY, NH 03053
Phone: 603-421-9000

QUOTATION

M2 106 CONVENTIONAL CHASSIS

SET BACK AXLE - TRUCK
CUM ISB 6.7-240 240 HP @ 2300 RPM, 2600 GOV, 560 LB/FT @ 1600 RPM
ALLISON 2200 RDS AUTOMATIC TRANSMISSION WITH PARK PAWL WITH PTO PROVISION
DETROIT DA-RS-17.5-2 17,500# R-SERIES SINGLE REAR AXLE
20,000# FLAT LEAF SPRING REAR SUSPENSION WITH RADIUS ROD
DETROIT DA-F-10.0-3 10,000# FF1 71.5 KPI/3.74 DROP SINGLE FRONT AXLE
8,000# TAPERLEAF FRONT SUSPENSION
106 INCH BBC FLAT ROOF ALUMINUM CONVENTIONAL CAB
5475MM (216 INCH) WHEELBASE
9/32X3-7/16X10-1/16 INCH STEEL FRAME (7.14MMX255.6/0.281X10.06 INCH) 80KSI
2275MM (90 INCH) REAR FRAME OVERHANG

			PER UNIT		TOTAL
VEHICLE PRICE	TOTAL # OF UNITS (1)	$	65,693	$	65,693
EXTENDED WARRANTY		$	1,981	$	1,981
DEALER INSTALLED OPTIONS		$	10,870	$	10,870
CUSTOMER PRICE BEFORE TAX		$	***78,544***	$	***78,544***
TAXES AND FEES					
TAXES AND FEES		$	0	$	0
OTHER CHARGES		$	0	$	0
TRADE-IN					
TRADE-IN ALLOWANCE		$	(0)	$	(0)
BALANCE DUE	**(LOCAL CURRENCY)**	$	78,544	$	78,544

COMMENTS: Projected delivery on ___ / ___ / ___ provided the order is received before ___ / ___ / ___.
APPROVAL: Please indicate your acceptance of this quotation by signing below: Customer:
X_____ Date: ___ / ___ / ___.

Daimler Truck Financial

Financing that works for you.

See your local dealer for a competitive quote from Daimler Truck Financial, or contact us at Information@dtfoffers.com.

Daimler Truck Financial offers a variety of finance, lease and insurance solutions to fit your business needs. For more information about our products and services, visit our website at www.daimler-truckfinancial.com.

Prepared for:
John Stewart
State of NH (City of Nashua)
229 Main St
Nashua, NH 03061
Phone: 603-589-4714

Prepared by:
Bryan Sansouci
FREIGHTLINER OF NEW HAMPSHIRE, INC.
ROUTE 102
LONDONDERRY, NH 03053
Phone: 603-421-9000

DIMENSIONS

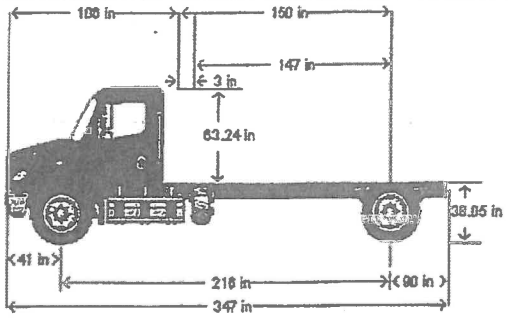

VEHICLE SPECIFICATIONS SUMMARY - DIMENSIONS

Model M2106
Wheelbase (545) ..... 5475MM (216 INCH) WHEELBASE
Rear Frame Overhang (552) ..... 2275MM (90 INCH) REAR FRAME OVERHANG
Fifth Wheel (578) ..... NO FIFTH WHEEL
- Mounting Location (577) ..... NO FIFTH WHEEL LOCATION
- Maximum Forward Position (in) 0
- Maximum Rearward Position (in) 0
- Amount of Slide Travel (in) 0
- Slide Increment (in) 0
- Desired Slide Position (in) 0.0

Cab Size (829) ..... 106 INCH BBC FLAT ROOF ALUMINUM CONVENTIONAL CAB
Sleeper (682) ..... NO SLEEPER BOX/SLEEPERCAB
Exhaust System (016)..... RH OUTBOARD UNDER STEP MOUNTED HORIZONTAL AFTERTREATMENT SYSTEM ASSEMBLY WITH RH HORIZONTAL TAILPIPE

TABLE SUMMARY - DIMENSIONS

Prepared for:
John Stewart
State of NH (City of Nashua)
229 Main St
Nashua, NH 03061
Phone: 603-589-4714

Prepared by:
Bryan Sansouci
FREIGHTLINER OF NEW
HAMPSHIRE, INC.
ROUTE 102
LONDONDERRY, NH 03053
Phone: 603-421-9000

Dimensions	Inches
Bumper to Back of Cab (BBC)	106.3
Bumper to Centerline of Front Axle (BA)	40.7
Min. Cab to Body Clearance (CB)	3.0
Back of Cab to Centerline of Rear Axle(s) (CA)	150.4
Effective Back of Cab to Centerline of Rear Axle(s) (Effective CA)	147.4
Back of Cab Protrusions (Exhaust/Intake) (CP)	0.0
Back of Cab Protrusions (Side Extenders/Trim Tab) (CP)	0.0
Back of Cab Protrusions (CNG Tank)	0.0
Back of Cab Clearance (CL)	3.0
Back of Cab to End of Frame	240.4
Cab Height (CH)	63.2
Wheelbase (WB)	216.0
Frame Overhang (OH)	90.0
Overall Length (OAL)	346.7
Rear Axle Spacing	0.0
Unladen Frame Height at Centerline of Rear Axle	38.0

Performance calculations are estimates only. If performance calculations are critical, please contact Customer Application Engineering.

NH BODY & TRAILER

DN-0335845-1

Quoted By: Tom Forbes
Created: 10/4/2016
Revised: 10/4/2016

11 NAVIGATOR ROAD • LONDONDERRY, NH 03053 • Phone: 603-647-5861 • Fax: 603-845-1191 •

Configuration: City of Nashua- Div. of Public Works
Reference:

Sales Representative: Tom Forbes

Customer
Freightliner of New Hampshire, Inc.
23 Meadows Drive
P. O. Box 1440
Londonderry, NH 03053

Customer Number:
Terms: **Net 10 days**

Contacts
Freightliner of New Hampshire, Inc.
p. 603-845-3100
f.

Ship to:
p. 866-769-8264

Ship To
R S TECHNICAL SERVICES, INC.
292 MIDLAND TRAIL

MT. STERLING, KY 40353

Shipping Method: **Delivery/Driveaway**

Model	Description	Plant
GVSD08520096	**MORGAN DRY FREIGHT VAN BODY 20 FT NOMINAL**	**PA - Morgantown**

Body Dimensional Information

Inside Height:	85.12
Inside Length:	243.31
Inside Width:	92.88
Rear Door Opening (W x H):	88W X 79.25H

Chassis Information

Make:	FREIGHTLINER	Year:	2017
Model:	M2/106 106.3in. BBC Cab	WB:	216
Expected Date:	12/9/2016	FW:	34
Color:	WHITE	FOB:	147
Rear Axle:	Single (1)	Vert. Exh.:	No
Air Horns on Cab Roof.:	No		

Note: Body dimensional information above for reference only. These dimensions may change based on any special pricing items included in this quotation.

OPTION	DESCRIPTION	QTY	Weight**
SUBFRAME	3" I-BEAM CROSSMEMBERS ON 12" CENTERS WITH 4" LONGRAIL	1	601.67
	MYLAR TAPE IS APPLIED BETWEEN ALL STEEL SUBFRAME COMPONENTS AND EXTRUDED ALUMINUM LOWER BOTTOM RAILS TO PREVENT CORROSION	1	0.21
MOUNTING	FULL MOUNT-U BOLT	1	141.53
	MUDFLAPS-MORGAN 24" X 36" BLACK	1	17.62
FLOOR	1 1/8 IN. LAMINATED HARDWOOD FASTENED TO SUBFRAME WITH 2 COUNTERSUNK SCREWS PER FLOOR BOARD PER CROSS MEMBER IN A STAGGERED PATTERN. FLOOR BOARDS ARE SHIP LAPPED AND PRE-UNDERCOATED FOR PROTECTION FROM ELEMENTS.	1	685.88
THRESHOLD	STEEL GALVANIZED ANGLE FLUSH TO REAR	1	7.18
REAR DOOR	MORGANPLATE WHITE 2-PANEL FULL	1	108.76
	FLUSH ENTRY LOCKING HARDWARE 2 PANEL FULL	1	59.17
	HOLDBACK PANEL 2 PANEL FULL WITH FLUSH ENTRY HARDWARE	1	2.73
REAR FRAME	HEADER SUB-COMPONENT GALVANNEALED WITH 35 OR S36 LIGHTS	1	56.99
	POST SUB-COMPONENT GALVANNEALED FOR PANEL DOOR	1	90.51
	ENDPLATE SUB-COMPONENT FOR PANEL DOOR FOR 4.12" ENDPLATE	1	76.5
	GALVANNEALED HEADER POST GUSSET	1	2.78
SKINS-SIDES	SKINS .040" STANDARD NEW PEPSICO BLUE	1	0
	RIVETS FOR FRONT AND SIDEWALLS-20 BODY	1	3.81

11 NAVIGATOR ROAD • LONDONDERRY, NH 03053 • Phone: 603-647-5861 • Fax: 603-845-1191 •

SIDE WALL	EXTRUDED ALUMINUM TOP AND BOTTOM RAILS WITH 1 3/8 IN. DEEP GALVANIZED STEEL Z-SHAPED VERTICAL POSTS INSTALLED ON 16 IN. CENTERS CURBSIDE.	1	135.21
	EXTRUDED ALUMINUM TOP AND BOTTOM RAILS WITH 1 3/8 IN. DEEP GALVANIZED STEEL Z-SHAPED VERTICAL POSTS INSTALLED ON 16 IN. CENTERS ROADSIDE.	1	135.21
FRONT END	AERODYNAMIC ALUMINUM RADII WITH (5) STEEL Z POST	1	56.47
SKINS-FRONT	SKINS .040" STANDARD NEW PEPSICO BLUE	1	0
ROOF	.032 ONE PIECE ALUMINUM SHEET WITH ANTI-SNAG ROOF BOWS ON 24 IN. CENTERS WITH CROWNED ROOF DESIGN WHICH PREVENTS WATER/ICE POOLING	1	130.86
	AERODYNAMIC ALUMINUM RADIUS AND POLY-TUFF CORNER CAPS	1	28.41
INTERIOR LIGHTS	ONE INTERIOR LED DOME LAMP	1	2.58
	TOTAL DOMELIGHT(S) = 2;	1	0
	EXTRA INTERIOR LED DOME LAMP ON SAME CIRCUIT	1	2.27
EXTERIOR LIGHTS	SWITCH AND INDICATOR LAMP MOUNTED IN CAB DASH AND ROCKER SWITCH WITH BRACKET MOUNTED INSIDE BODY AT REAR	1	10.09
INTERIOR LIGHTS	SWITCH FOR DOMELIGHT CIRCUIT	1	0
UNDERRIDE	FULL WIDTH DROP STEP WITH 10 IN. STEP. SURFACE IS POOCHED FOR SAFETY	1	115.05
DOCK BUMPER	10 IN. DOCK EXTENSION CONSISTING OF STEEL DIAMOND PLATE FORMED COVER OVER A HARDWOOD FILLER, PAINTED BLACK	1	119.39
EXTERIOR LIGHTS	TECNIQ S36 LED SEALED CLEARANCE LIGHT, PER FMVSS-108 INSTALLED IN FRONT CORNER CAPS, SIDE TOP RAILS AND FIVE ACROSS REAR HEADER.	1	4.34
	COMPONENTS USED FOR CHASSIS WIRING AND LIGHTS INT/GRND	1	3.22
PAINT	PANEL REAR DOOR TO CUSTOMER SPECS-IMRON	1	0.0
	MATCH NEW PEPSICO BLUE SKINS P6301EX	1	0
	REAR FRAME STEEL CUSTOMER SPECS IMRON	1	0.0
	MATCH NEW PEPSICO BLUE SKINS P6301EX	1	0
DECALS	MORGAN-BLACK-FULL MOUNT	1	0.11
SAFETY ITEMS	ALUMINUM 12" GRAB HANDLE-BOLTED	2	1.02
	GRAB HANDLE MOUNTED ON CURBSIDE AND ROADSIDE REAR	1	0
	CONSPICUITY TAPE INSTALLATION	1	0.48
	BOTH SIDES OF BODY, ACROSS BOTTOM OF REAR DOOR, UNDERRIDE PROTECTOR, AND TWO INVERTED L's ON THE UPPER OUTBOARD CORNERS. PER DRAWING CONSP00	1	0

Total Body Weight 2600.05

NH BODY & TRAILER

11 NAVIGATOR ROAD • LONDONDERRY, NH 03053 • Phone: 603-647-5861 • Fax: 603-845-1191 •

DN-0335845-1

Quoted By: Tom Forbes

Created: 10/4/2016

Revised: 10/4/2016

NOTES TO CUSTOMER: Based on drop shipped chassis to Morgantown, PA

DIMENSIONAL DATA: All dimensions, weights, and measurements specified herein are estimates and are subject to Morgan's manufacturing tolerances, may change without notice, and may vary depending on options selected. Please contact Morgan for dimension, weights, and measurements for your particular truck body and chassis.

NOTICE: Morgan Corporation manufactures all vehicles to conform to applicable U.S. Federal Motor Vehicle Safety Standards (FMVSS) in effect at time of manufacture. Buyer/end-user is responsible for ensuring this vehicle, when operated, meets all applicable federal, state and local rules, regulations and statutes, including, but not limited to, those governing safety equipment, cargo securement, and accessories.

Morgan will give Customer a notice of release ("Release Notice") of their completed truck body units ("Vehicles") and Customer will remove, or authorize Morgan to remove, the Vehicles from Morgan's lot within five (5) days of the date thereof. After which time, and pursuant to Morgan's Standard Sales Agreement, Morgan shall not be responsible for any loss or damage thereto, for any reason, including, but not limited to, such loss or damage caused by fire, flood, storm, act of God, vandalism, accident, explosion, war, strike, civil or military authority, or any other similar causes.

In addition, Customer agrees to reimburse Morgan's then current lot lease expenses for every month past fourteen (14) days of the date of the Release Notice that the Vehicles remain on Morgan's lot. Customer also agrees to pay Morgan for all costs incurred, after fourteen (14) days of the date of the Release Notice, to maintain the Vehicles in satisfactory (road-worthy) working order.

Morgan shall not be responsible nor otherwise be held liable for cargo loss, loss of use, property damage, commercial (economic) loss, or other direct, indirect, incidental, consequential, or special damages alleged to have been caused by any Morgan product, or any delay in delivery of such product.

Morgan and NEW HAMPSHIRE BODY/TRAILER LLC reserves the right to withdraw this proposal if not accepted within 30 days. Morgan and NEW HAMPSHIRE BODY/TRAILER LLC's Standard Sales Agreement Terms and Conditions apply to this quotation. Copies available upon request. Any additional or different terms proposed by Buyer are objected to and hereby rejected.

Acceptance of Proposal - The pricing, specifications, and conditions of this quotation document are satisfactory and are hereby accepted. You are authorized to do the work as specified. Payment will be made as outlined above.

Subtotal:	$10,870.00
Estimated Tax:	$0.00
Sell Price Each:	$10,870.00
x Qty:	1
Total Quote Price:	**$10,870.00**

Pricing may or may not include an estimation of applicable sales tax.

Customer Signature:	Date of Acceptance:	Customer PO Number:

PO and Chassis Details:

*** Chassis Expected Date:** 12/9/2016

#	* PO #	* Chassis VIN	Customer Unit #	Chassis Factory #
1				

** PO #, Chassis VIN #, and Chassis Expected Date are required when placing order with Morgan Corporation. Please provide if not listed above*

THE CITY OF NASHUA

Financial Services

Purchasing Department

"The Gate City"

December 1, 2016
Memo #17-080

TO: MAYOR DONCHESS
FINANCE COMMITTEE

SUBJECT: PURCHASE OF ONE (1) PIPELINE INSPECTION CAMERA SYSTEM (VALUE: $138,600)
DEPARTMENT: 169 WASTEWATER; FUND: WERF – COLLECTION SYSTEMS

Please see the attached communication from Noelle Osborne, Wastewater Department Operations Supervisor, dated November 21, 2016 for the information related to this purchase.

Pursuant to **§ 5-84 Special purchase procedures** A. (3) Purchases which can be procured through cooperative intergovernmental purchase agreements with other governmental jurisdictions.

The Wastewater Department Operations Supervisor, Board of Public Works (11/21/2016 meeting) and the Purchasing Department recommend this purchase in an amount of **$138,600** to **H.P. Fairfield** of **Pembroke, NH.**

Respectfully,

Dan Kooken
Purchasing Manager

Cc: N Osborne L Fauteux

229 Main Street • Nashua, New Hampshire 03061 • Phone (603) 589-3330 • Fax (603) 589-3344

City of Nashua, Public Works Division

To: Board of Public Works Meeting Date: November 21, 2016

From: Noelle Osborne
Plant Operations Supervisor

Re: Purchase of Pipeline Inspection Camera System

Motion B: To approve the purchase a R.S. Technical Inc. Pipeline Inspection Camera System from H.P. Fairfield, Pembroke, NH price of $138,600.10 pursuant to the Huston-Galveston Area Counsel (HGAC) contract SC01-15. Funding will be through Department: 169 Wastewater; Fund: WERF - Collection Systems; Account Classification 81 Machinery & Equipment.

Attachments: R.S. Technical Inc. quotes.

Discussion: The camera system currently in use is 15 years old and showing signs of age. Reliability has become an issue with the breakdowns of the camera, carriage, and the software is out of regulatory compliance.

The proposed camera system from R. S. Technical Inc. was the choice of the pipeline camera crew after demonstrating four systems over the last year. R. S. Technical will outfit a van with a portable office with everything necessary to record and document findings, clean up equipment and environmental controls. One of the biggest benefits of this system over the others is part availability; common repair parts for the camera carriages are available at local hardware stores instead of having to order everything. The video cable is a steel armored single conductor and easily repaired in the field with the tools supplied. Other systems have a cable with 7 smaller wires. Additionally, should a camera fail, R. S. Technical will send a loaner camera while repairs are made.

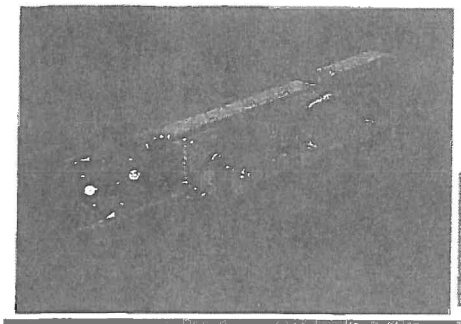

RS Technical Services Inc.

Design and Manufacture of Video Pipeline Inspection Systems

conductor
THE SINGLE SOLUTION

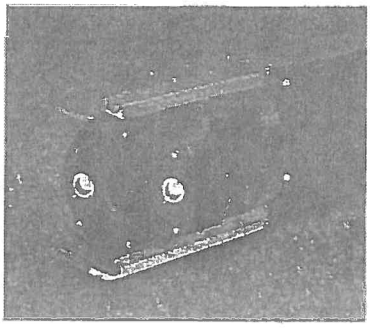

H-GAC Hi-Cube Install
G049

1327 Clegg Street - Petaluma, CA 94954
707/778-1974 x236 Fax: 707/778-1981
chrisr@rstechserv.com
www.rstechserv.com

Quote Number:
000251

Salesperson:
Chris Remillard

Sales Quotation

Date: 8/12/2014 Expiration: 12/31/2017

Line #	Part #	Description	Price	Qty	Extend
		Installation for 12' to 16' Hi-Cube customer supplied vehicle			
1	051-01000	Installation, Trailer Office Area To Include: (1) - Linoleum flooring (1) - L-shaped countertop (1) - Printer shelf (1) - Shelf mounted equipment console (1) - 12" x 26" x 40" upper cabinet (1) - 20" x 36" bench seat with cushion (1) - 5' indirect fluorescent light (1) - 12 volt dc dome light (1) - Bulkhead door (1) - 30" x 36" bulkhead sliding window (2) - Countertop height, 110 volt ac duplex outlets Equipment Area To Include: (1) - Linoleum flooring (1) - Floor mounted, two door cabinet (1) - Rubber matting covered countertop installed on top of cabinet (1) - 12" x 20" x 40" upper cabinet (1) - Five drawer tool box with work top (1) - 5' indirect fluorescent light (1) - 18" fluorescent light (1) - 12 volt dc dome light (1) - Countertop height, 110 volt fourplex outlet (3) - Street side, wall mounted, 110 volt duplex outlets		1	
2	841-20671	Cable Kit, Cutaway/Cube/Step Van, Installed		1	
3	606-18274	Rhino Liner Rubber Flooring		1	
4	703-13554	Operators Chair With 5 Casters		1	
5	050-02022	20 Gallon Water Washdown System With Reel And Hose, Cutaway/Cube/Step Van, Self Contained (1) - Sink and faucet (1) - 2.8 g.p.m. water pump (1) - 20 gallon water tank with shutoff valve (1) - Retractable hose reel with 20' hose and nozzle		1	
		Safety Lighting			

Line #	Part #	Description	Price	Qty	Extend
6	051-38603	Strobe Light, LED, Whelen L21HAP, Amber, Installed		1	
7	541-37613	Whelen Traffic Advisor TAN85 Sequential Light Bar, LED, 12 Volt DC, Installed		1	
8	051-31911-1	Floodlight Set, 27W 12V LED, Installed		1	
		Generator and Charging System			
9	050-33939	5.5 Kw Onan CMM Air Cooled, Gasoline Generator And All Mounting Accessories, Box Mount Installed		1	
10	841-34528	12 Volt, 55 Amp Power Supply With 3 Stage, Battery Over Charging Protection Circuit		1	
		Roof Mounted A/C & Heater			
11	050-02017	13,770 Btu Roof Mounted Air Conditioner With Heat Strip		1	
12	051-31419	Wall Heater, 1,500 Watt Cube/Step Van/Trailer		1	
		Mainline Controllers			
13	020-02000-00	Mainline Controller, Single Conductor, ETL Listed (1) - Mainline controller (1) - Power cord (1) - Parts catalog (1) - System operations manual		1	
14	010-01103-01	Auxiliary Desktop Controller, Dual Tone, Zoom, Joystick		1	
15	010-01102-01	Auxiliary Handheld Controller With All Zoom Camera And Tractor Transporter Functions, Equipment Room		1	
		Mainline Cable Reel			
16	030-01000-20	Mainline Cable Reel, Single Conductor (1) - Reel speed controller (1) - Footage counter, English (1) - 6 pin x 3 pin screw on pigtail		1	
		1000' of Single Conductor Cable			
17	569-20283	Single Conductor, Steel Armored Cable, Per Foot		1000	
		LED Camera			
18	010-01655-201	TrakSTAR Pan & Tilt Zoom Camera, NTSC, Single Conductor (1) - TrakSTAR rotating head zoom camera, 4 pin, with LED lighting (1) - Camera case		1	
		Steerable 6 Wheeled Transporter			
19	032-02500-030	TranSTAR Steerable, V3, Inspection Transport Vehicle, Single Conductor (1) - Mainline steerable tractor, 6 pin (1) - Tractor to camera power cable (6) - Standard tires (1) - Tractor extension kit (1) - TranSTAR Insertion/Retrieval Assembly (1) - Tractor storage rack (1) - Tractor operations manual		1	
		Wheel Sets			
20	867-34822	High Traction Caster Wheel, TranSTAR Tractor		6	
21	867-34843	Knobby Balloon Wheel, TranSTAR Tractor		4	
22	860-37377	8" X 2" Pneumatic Wheel Assembly, TranSTAR Tractor		1	
23	840-35686	MegaTRAK wheel kit, TranSTAR Tractor Includes: (6) - Hub assemblies (6) - 2.70" diameter wheel rings		1	

Line #	Part #	Description	Price	Qty	Extend
		(6) - 3.30" diameter wheel rings (4) - 4.40" diameter wheel rings (1) - Snap ring pliers			
		Maintenance Kit			
24	840-10352	Maintenance Tool Kit (1) - 6" slim taper file and handle (1) - Four in one multi purpose screwdriver (1) - 40 watt soldering iron (1) - Rosin flux solder (1) - Socket wrench set, 5/16" - 3/4" (1) - Tee handle hex wrench set (1) - Ball end hex wrench set (1) - 6" diagonal pliers (1) - 6" slip joint pliers (1) - Digital multi meter (1) - Heat gun (1) - Needle nose pliers (1) - 16 oz. rubber mallet (1) - Roll, 3/4" electrical tape (1) - Wire nut assortment		1	
25	806-31484	Test Cable, Mainline, N Plug X 6 Pin Screw On		1	
26	806-36831	Cable, Mainline, 4 Pin Female (Euro) Screw On To 6 Pin Male Screw On (Camera Test Cable)		1	
		Down Hole Cable Guide System			
27	039-01000-10	Down hole Roller Set, Single Manhole Setup with 6 poles and Articulating Arm Cable Guide (1) - Top manhole roller (1) - Double roller (1) - Manhole adaptor hook (6) - Extension pole (1) - Grab hook (1) - Articulating arm, nylon roller (1) - Lowering rope		1	
		Data Collection			
28	040-03500-01	Data Display Lite, Rack Mount (1) - Data Display Lite information system (1) - Information system keyboard (1) - 19" mountable rack		1	
29	704-34196	Monitor, 19" Tru-Vu Video/Computer Flat Panel LCD/TFT		1	
30	045-02000-04	Digital Video Recorder, Installed		1	
		Training			
31	950-18024-3	Training, RST Equipment/P.O.S.M., Other Personnel, Per Day		2	
		Manuals			
32	900-32036	Operation And Installation Manuals, CD		1	
		Subtotal			**$80,417.80**
		Changes based on the Component System List Provided			
33	051-38603	Strobe Light, LED, Whelen L21HAP, Amber, Installed		1	
34	606-12572	Vehicle Backup Alarm		1	
35	051-33253-1	Video System, Vehicle Back Up, Brigade Electronics Model A2591, Installed		1	
36	606-30365	Highway Warning Triangle Kit, 3 Triangles		1	
37	051-02510	Additional Cost for 24' Box Install		1	
38	051-02530	LONSEAL Lonplate equipment room flooring, Cutaway/Cube Van		1	
39	050-02022-01	30 Gallon Hi Pressure Water Washdown		1	

Line #	Part #	Description	Price	Qty	Extend
		System With Reel And Hose, Cutaway/Cube/Step Van, Self Contained (1) - Sink and faucet (1) - 4.0 g.p.m. water pump (1) - 30 gallon water tank with shutoff valve (1) - Retractable hose reel with 20' hose and nozzle			
40	051-31419	Wall Heater, 1,500 Watt Cube/Step Van/Trailer		1	
41	605-18264	Cable Access Door		1	
42	010-01655-202	TrakSTAR Pan & Tilt Zoom Camera with diagnostics, NTSC, Single Conductor (1) - TrakSTAR rotating head zoom camera with diagnostics and LED lighting, 4 pin (1) - Camera case		1	
43	010-01655-051	Inclinometer Factory Upgrade, TrakSTAR Camera **(Lead Time)** - See Data Acquisition For Additional Items		1	
44	010-01655-08	Laser Crack Measurement Factory Upgrade, NovaSTAR/TrakSTAR Camera **(Lead Time)**		1	
45	032-02500-034	TranSTAR Steerable, V3, Inspection Transport Vehicle, Single Conductor with Integrated Color Rear View Camera and Motorized Camera Lift (1) - Mainline steerable tractor, 6 pin with Integrated Color Rear View Camera (1) - Camera lift for TrakSTAR camera (1) - Tractor to camera power cable (6) - Standard tires (1) - Tractor extension kit (1) - TranSTAR Insertion/Retrieval Assembly (1) - Tractor storage rack (1) - Tractor operations manual		1	
46	860-37376	6" X 2" Pneumatic Wheel Assembly, TranSTAR Tractor		4	
47	840-40830	Extension Kit, Gear Reduction, TranSTAR		1	
48	860-40850	8" X 2" Pneumatic Wheel Assembly, Planetary Gear, TranSTAR Tractor		4	
49	010-01105-01	Auxiliary Wireless Controller, Dual Tone, Zoom, PS2 (1) - PS2 Wireless Controller (1) - PS2 Wireless Controller to Main Line Cable Reel Interface		1	
50	569-20283	Single Conductor, Steel Armored Cable, Per Foot		1000	
51	841-34293	Mainline Cable Reel emergency kill switch factory upgrade - Includes a lighted red operator button		1	
52	806-37583	Cable, 3 Pin X 6 Pin With Sonde Transmitter		1	
53	052-39140	Location Detector/Receiver, Rycom Model 8873-SD		1	
54	806-39319	Cable, Mainline, 4 Pin Female (Euro) Screw On To 6 Pin Male Screw On (Camera Test Cable)		1	
55	040-04500-004	Winlogger II P.O.S.M. Pro Data Acquisition System (1) - Rack mountable Winlogger II computer with DVD-RW and CD-RW recorder (1) - P.O.S.M. software with MPEG video and JPEG snapshots (1) - Winlogger II overlay		1	

Line #	Part #	Description	Price	Qty	Extend
		(1) - Keyboard (1) - PS/2 optical mouse (1) - Set computer speakers (1) - Cable kit, Winlogger II (1) - 650 watt ups battery backup, Rack Mount (2U) (3) - Year C.P.U. warranty (1) - 30 day basic support			
56	950-33941	Technical Support, P.O.S.M. Pro Software, One Year		1	
57	045-01000-05	Color Laser Report Printer For P.O.S.M. Pro, Installed		1	
58	051-32313	CAT 5 Computer Network Download Port, External, Installed		1	
59	051-34544	Monitor, 19", Flat Panel LCD/TFT, Equipment Room, Installed		1	
60	040-04520-11	Winlogger II Version 2 Inclination interface with Cables (For Use With P.O.S.M. Pro & TrakSTAR II Camera)		1	
61	806-40631	Pigtail 16 gauge, 3 Pin Male X 6 Pin Female, Bullet Connector To Tractor Or Camera		2	
62	841-31486	Removable Pigtail Field Termination Kit With Bullet Connector, 6 Pin Female X 3 Pin Male Pigtail Cable And Installation Items		1	
63	806-38138	Cable, Interconnect, TranSTAR (4 Pin) to Camera (4 Pin), 13.5 inches long		1	
64	448-11253	Cable Grip Assembly (Strain Relief)		1	
65	050-33209	8.0 Kw Onan Liquid Cooled, Quiet Diesel Generator and All Mounting Accessories, Installed		1	
66	800-39590-2	Stainless Storage Shelf Above Main Line Cable Reel		1	
67	950-18039	Shipping - FOB Petaluma CA or Mt Sterling, KY ***Subject to Change*** Estimated		1	
		Subtotal			**$59,972.30**
68	DEDUCT	DEDUCT FOR PRICE DIFFERENCE ON CAMERA TEST CABLE	($5.00)	1	($5.00)
69	DEDUCT	DEDUCT FOR RHINO LINING FLOOR	($1,560.00)	1	($1,560.00)
70	DEDUCT	DEDUCT FOR NON PLANETARY WHEEL	($225.00)	1	($225.00)

I accept the terms and conditions of this quotation.

Signed: _____

Name: _____ Date: _____

Terms:

Sub-Total:	$138,600.10
Tax:	
Total:	**$138,600.10**

THE CITY OF NASHUA

Financial Services

Purchasing Department

"The Gate City"

December 1, 2016
Memo #17-081

TO: MAYOR DONCHESS
FINANCE COMMITTEE

SUBJECT: ENGINEERING SERVICES FOR THE REPAIR OF HENRI BURQUE PEDESTRICAN BRIDGE (VALUE: $17,107)
DEPARTMENT: 160 ADMIN/ENGINEERING; FUND: CAPITAL
ACTIVITY: BRIDGE REHABILITATION

Please see the attached communication from Stephen Dookran, P.E., City Engineer, dated November 21, 2016 for the information related to this purchase.

Pursuant to NRO **§ 5-83 Professional Services** (A) In the purchase of accounting, architectural, auditing, engineering, legal, medical and ambulance services and purchases of independent professional consultant services for personnel, data processing, actuarial, planning, management and other comparable purchases competitive bidding shall not be required.

The City Engineer, Board of Public Works (11/21/2016 meeting) and the Purchasing Department recommend this contract award in an amount of **$17,107** to **CLD Consulting Engineers** of **Manchester, NH.**

Respectfully,

Dan Kooken
Purchasing Manager

Cc: S Dookran L Fauteux

229 Main Street • Nashua, New Hampshire 03061 • Phone (603) 589-3330 • Fax (603) 589-3344

City of Nashua, Public Works Division

To: Board of Public Works Meeting Date: November 21, 2016

From: Stephen Dookran, P.E., City Engineer
Engineering Department

Re: Henri Burque Pedestrian Bridge
Engineering Services

B. Motion: To approve the contract for engineering services for repairs to the Henri Burque Pedestrian Bridge to CLD Consulting Engineers of Manchester, NH in the amount of $17,107. Funding will be through Department: 160 Admin/Engineering; Fund: Capital; Activity: Bridge Rehabilitation.

Discussion: The Henri Burque Pedestrian Bridge provides connectivity from the Pennichuck Middle School to surrounding neighborhoods east of the school. Routine inspections by the NHDOT stated the deck has a rating of 6 (satisfactory) and the superstructure has a rating pf 7 (good). However, the substructure has a rating of 3 (serious) primarily due to the deterioration of the pier caps at the point where it sustains the bridge bearing pads over which the steel superstructure rests. The nature of the distresses requires specialized technical expertise in bridge repairs. Engineering has negotiated a contract for $17,107 with CLD Consulting Engineers of Manchester, NH, who recently provided engineering services for the Manchester Street Bridge project, to provide the design for bridge repairs. This includes development of the specialized detailed drawings and contract documents, bidding assistance and construction engineering. Sole servicing these services to CLD is preferred because of CLD's experience with various bridges and retaining walls in the city as well as their fee rates are reasonable.

Pending approvals, design would be carried on during the winter with construction repairs in the spring.

CONTRACT FOR PROFESSIONAL SERVICES

HENRI BURQUE PEDESTRIAN BRIDGE

A CONTRACT BETWEEN

THE CITY OF NASHUA, 229 MAIN STREET, NASHUA, NH 03061-2019
AND

CLD CONSULTING ENGINEERS, INC.
and its successors, transferees and assignees (together "Professional Engineer")
NAME AND TITLE OF PROFESSIONAL ENGINEER

540 COMMERCIAL STREET
MANCHESTER, NH 03101
ADDRESS OF PROFESSIONAL ENGINEER

WHEREAS, the City of Nashua, a political subdivision of the State of New Hampshire, from time to time requires the services of a Professional Engineer ; and

WHEREAS, it is deemed that the services of a Professional Engineer herein specified are both necessary and desirable and in the best interests of the City of Nashua; and

WHEREAS, Professional Engineer represents they are duly qualified, equipped, staffed, ready, willing and able to perform and render the services hereinafter described;

NOW, THEREFORE, in consideration of the agreements herein made, the parties mutually agree as follows:

1. DOCUMENTS INCORPORATED. The following exhibits are by this reference incorporated herein and are made part of this contract:

Exhibit A--General Conditions for Contracts
Exhibit B--Scope of Services, Contract Time, Fee Schedule

The Contract represents the entire and integrated agreement between the parties and supersedes prior negotiations, proposals, representations or agreements, either written or oral. Any other documents which are not listed in this Article are not part of the Contract.

In the event of a conflict between the terms of the Proposal and the terms of this Agreement, a written change order and/or fully executed City of Nashua Purchase Order, the terms of this Agreement, the written change order or the fully executed City of Nashua Purchase Order shall control over the terms of the Proposal.

2. WORK TO BE PERFORMED Except as otherwise provided in this contract, Professional Engineer shall furnish all services, equipment, and materials and shall perform all operations necessary and required to carry out and perform in accordance with the terms and conditions of the contract the work described.

3. PERIOD OF PERFORMANCE. Professional Engineer shall perform and complete all work within the time periods set forth and may only be altered by the parties by a written agreement to extend the period of performance or by termination in accordance with the terms of the contract. Professional Engineer shall begin performance upon receipt of an Executed Contract **and** a valid Purchase Order issued from the City of Nashua.

4. COMPENSATION. Professional Engineer agrees to perform the work for a total cost not to exceed **SEVENTEEN THOUSAND ONE SEVEN DOLLARS ($ 17,107.00)**

which, unless otherwise provided in this contract, shall be paid in accordance with the provisions of Exhibit B or unless Professional Engineer has received a written exemption from the City of Nashua. Professional Engineer shall submit monthly requests for payment for services performed under this agreement directly to

City of Nashua
Attn: Accounts Payable
PO Box 2019
Nashua, NH 03061-2019
Atten: Joe Mendola

To facilitate the proper and timely payment of applications, the City of Nashua requires that all invoices contain a valid **PURCHASE ORDER NUMBER**.

Requests for payment shall be submitted no later than fifteen (15) days after the end of each month and must include a detailed summary of the expenditures reported in a form that supports the approved budget. Specifically, Professional Engineer agrees to provide the following with each request for payment:

1. Appropriate invoice forms. The forms shall include the project purchase order number, a listing of personnel hours and billing rates, and other expenditures for which payment is sought.

2. A progress report. The report shall include, for each monthly reporting period, a description of the work accomplished, problems experienced, upcoming work, any extra work carried out, and a schedule showing actual expenditures billed for the period, cumulative total expenditures billed and paid to date under the contract, and a comparison of cumulative total expenditures billed and paid to the approved budget.

The City of Nashua will pay for work satisfactorily completed by Professional Engineer. The City of Nashua will pay Professional Engineer within **30** days of approval by the City of Nashua of the submitted invoice forms and progress reports. The City of Nashua will make no payments until the invoice forms and progress reports have been submitted and approved.

5. EFFECTIVE DATE OF CONTRACT. This contract shall not become effective until and unless approved by the City of Nashua.

6. NOTICES. All notices, requests, or approvals required or permitted to be given under this contract shall be in writing, shall be sent by hand delivery, overnight carrier, or by United States mail, postage prepaid, and registered or certified, and shall be addressed to:

CITY OF NASHUA REPRESENTATIVE:

Division of Public Works, Engineering

9 Riverside Street

Nashua, NH 03062

REPRESENTATIVE:

Any notice required or permitted under this contract, if sent by United States mail, shall be deemed to be given to and received by the addressee thereof on the third business day after being deposited in the mail. The City of Nashua or Professional Engineer may change the address or representative by giving written notice to the other party.

IN WITNESS WHEREOF, the parties hereto have caused this contract to be signed and intend to be legally bound thereby.

City of Nashua, NH (signature)	***CLD Consulting Engineers, Inc. (signature)***
James Donchess, Mayor	
(Printed Name and Title)	***(Printed Name and Title)***
Date	***Date***

EXHIBIT A
TABLE OF CONTENTS
GENERAL CONDITIONS

1.	DEFINITIONS	GC--2
2.	PROFESSIONAL ENGINEER STATUS	GC--2
3.	STANDARD OF CARE	GC--2
4.	CITY OF NASHUA REPRESENTATIVE	GC--3
5.	CHANGES TO SCOPE OF WORK	GC--3
6.	CITY OF NASHUA COOPERATION	GC--3
7.	DISCOVERY OF CONFLICTS, ERRORS, OMISSIONS, AMBIGUITIES, OR DISCREPANCIES	GC--3
8.	TERMINATION OF CONTRACT	GC--4
9.	DISPUTE RESOLUTION	GC--5
10.	NO DAMAGES FOR DELAY	GC--6
11.	INSURANCE	GC--6
12.	INDEMNIFICATION	GC--7
13.	FISCAL CONTINGENCY	GC--7
14.	COMPENSATION	GC--7
15.	COMPLIANCE WITH APPLICABLE LAWS	GC--7
16.	NONDISCRIMINATION	GC--8
17.	ENDORSEMENT	GC--8
18.	ASSIGNMENTS, TRANSFER, DELEGATION, OR SUBCONTRACTING	GC--8
19.	CITY INSPECTION OF CONTRACT MATERIALS	GC--9
20.	DISPOSITION OF CONTRACT MATERIALS	GC--9
21.	PUBLIC RECORDS LAW, COPYRIGHTS, AND PATENTS	GC--9
22.	FINAL ACCEPTANCE	GC--10
23.	TAXES	GC--10
24.	NON-WAIVER OF TERMS AND CONDITIONS	GC--10
25.	RIGHTS AND REMEDIES	GC--10
26.	PROHIBITED INTERESTS	GC--10
27.	THIRD PARTY INTERESTS AND LIABILITIES	GC--11
28.	SURVIVAL OF RIGHTS AND OBLIGATIONS	GC--11
29.	SEVERABILITY	GC--11
30.	MODIFICATION OF CONTRACT AND ENTIRE AGREEMENT	GC--11
31.	CHOICE OF LAW AND VENUE	GC--11

General Terms and Conditions

1. **DEFINITIONS** Unless otherwise required by the context, "Professional Engineer", and its successors, transferees and assignees (together "Professional Engineer") includes any of the Professional Engineer's consultants, sub consultants, contractors, and subcontractors

2. **PROFESSIONAL ENGINEER STATUS** The parties agree that Professional Engineer shall have the status of and shall perform all work under this contract as a Professional Engineer, maintaining control over all its consultants, sub consultants, contractors, or subcontractors. The only contractual relationship created by this contract is between the City of Nashua and Professional Engineer, and nothing in this contract shall create any contractual relationship between the City of Nashua and Professional Engineer's consultants, sub consultants, contractors, or subcontractors. The parties also agree that Professional Engineer is not a City of Nashua employee and that there shall be no:

   (1) Withholding of income taxes by the City of Nashua:
   (2) Industrial insurance coverage provided by the City of Nashua;
   (3) Participation in group insurance plans which may be available to employees of the City of Nashua;
   (4) Participation or contributions by either the Professional Engineer or the City of Nashua to the public employee's retirement system;
   (5) Accumulation of vacation leave or sick leave provided by the City of Nashua;
   (6) Unemployment compensation coverage provided by the City of Nashua.

3. **STANDARD OF CARE** Professional Engineer shall be responsible for the professional quality, technical accuracy, timely completion, and coordination of all work performed under this contract. Professional Engineer warrants that all work shall be performed with the degree of professional skill, care, diligence, and sound practices and judgment that are normally exercised by recognized professional firms with respect to services of a similar nature. It shall be the duty of Professional Engineer to assure at its own expense that all work is technically sound and in conformance with all applicable federal, state, and local laws, statutes, regulations, ordinances, orders, or other requirements. In addition to all other rights which the City of Nashua may have, Professional Engineer shall, at its own expense and without additional compensation, re-perform work to correct or revise any deficiencies, omissions, or errors in the work or the product of the work or which result from Professional Engineer's failure to perform in accordance with this standard of care. Any approval by the City of Nashua of any products or services furnished or used by Professional Engineer shall not in any way relieve Professional Engineer of the responsibility for professional and technical accuracy and adequacy of its work. City of Nashua review, approval, or acceptance of, or payment for any of Professional Engineer's work under this contract shall not operate as a waiver of any of the City of Nashua's rights or causes of action under this contract, and Professional Engineer shall be and remain liable in accordance with the terms of the contract and applicable law.

   Professional Engineer shall furnish competent and skilled personnel to perform the work under this contract. The City of Nashua reserves the right to approve key personnel assigned by Professional Engineer to perform work under this contract. Approved key personnel shall not be taken off of the project by Professional Engineer without the prior written approval of the City of Nashua, except in the event of termination of employment. Professional Engineer shall, if requested to do so by the City of Nashua, remove from the job any personnel whom the City of Nashua determines to be incompetent, dishonest, or uncooperative.

4. **CITY OF NASHUA REPRESENTATIVE** The City of Nashua may designate a City of Nashua representative for this contract. If designated, all notices, project materials, requests by Professional Engineer, and any other communication about the contract shall be addressed or be delivered to the City of Nashua Representative.

5. **CHANGES TO SCOPE OF WORK** The City of Nashua may, at any time, by written order, make changes to the general scope, character, or cost of this contract and in the services or work to be performed, either increasing or decreasing the scope, character, or cost of Professional Engineer's performance under the contract. Professional Engineer shall provide to the City of Nashua within 10 calendar days, a written proposal for accomplishing the change. The proposal for a change shall provide enough detail, including personnel hours for each sub-task and cost breakdowns of tasks, for the City of Nashua to be able to adequately analyze the proposal. The City of Nashua will then determine in writing if Professional Engineer should proceed with any or all of the proposed change. If the change causes an increase or a decrease in Professional Engineer's cost or time required for performance of the contract as a whole, an equitable adjustment shall be made and the contract accordingly modified in writing. Any claim of Professional Engineer for adjustment under this clause shall be asserted in writing within 30 days of the date the City of Nashua notified Professional Engineer of the change.

   When Professional Engineer seeks changes, Professional Engineer shall, before any work commences, estimate their effect on the cost of the contract and on its schedule and notify the City of Nashua in writing of the estimate. The proposal for a change shall provide enough detail, including personnel hours for each sub-task and cost breakdowns of tasks, for the City of Nashua to be able to adequately analyze the proposal. The City of Nashua will then determine in writing if Professional Engineer should proceed with any or all of the proposed change.

   Except as provided in this paragraph, Professional Engineer shall implement no change unless the City of Nashua in writing approves the change. Unless otherwise agreed to in writing, the provisions of this contract shall apply to all changes. The City of Nashua may provide verbal approval of a change when the City of Nashua, in its sole discretion, determines that time is critical or public health and safety are of concern. Any verbal approval shall be confirmed in writing as soon as practicable. Any change undertaken without prior City of Nashua approval shall not be compensated and is, at the City of Nashua's election, sufficient reason for contract termination.

6. **CITY OF NASHUA COOPERATION** The City of Nashua agrees that its personnel will cooperate with Professional Engineer in the performance of its work under this contract and that such personnel will be available to Professional Engineer for consultation at reasonable times and after being given sufficient advance notice that will prevent conflict with their other responsibilities. The City of Nashua also agrees to provide Professional Engineer with access to City of Nashua records in a reasonable time and manner and to schedule items that require action by the Board of Public Works and Finance Committee in a timely manner. The City of Nashua and Professional Engineer also agree to attend all meetings called by the City of Nashua or Professional Engineer to discuss the work under the Contract, and that Professional Engineer may elect to conduct and record such meetings and shall later distribute prepared minutes of the meeting to the City of Nashua.

7. **DISCOVERY OF CONFLICTS, ERRORS, OMISSIONS, AMBIGUITIES, OR DISCREPANCIES** Professional Engineer warrants that it has examined all contract documents, has brought all conflicts, errors, discrepancies, and ambiguities to the attention of the City of Nashua in writing, and has concluded that the City of Nashua's resolution of each matter is satisfactory to Professional Engineer. All future questions Professional Engineer may have concerning interpretation or clarification of this contract shall be submitted in writing to the City of Nashua within 10 calendar days of their arising. The writing shall state clearly and in full detail the basis for Professional Engineer's question or position. The City of Nashua representative shall render a

decision within 15 calendar days. The City of Nashua's decision on the matter is final. Any work affected by a conflict, error, omission, or discrepancy which has been performed by Professional Engineer prior to having received the City of Nashua's resolution shall be at Professional Engineer's risk and expense. At all times, Professional Engineer shall carry on the work under this contract and maintain and complete work in accordance with the requirements of the contract or determination of the City of Nashua. Professional Engineer is responsible for requesting clarification or interpretation and is solely liable for any cost or expense arising from its failure to do so.

8. **TERMINATION OF CONTRACT**

A. TERMINATION, ABANDONMENT, OR SUSPENSION AT WILL. The City of Nashua, in its sole discretion, shall have the right to terminate, abandon, or suspend all or part of the project and contract at will. If the City of Nashua chooses to terminate, abandon, or suspend all or part of the project, it shall provide Professional Engineer 10 day's written notice of its intent to do so.

If all or part of the project is suspended for more than 90 days, the suspension shall be treated as a termination at will of all or part of the project and contract.

Upon receipt of notice of termination, abandonment, or suspension at will, Professional Engineer shall:

1. Immediately discontinue work on the date and to the extent specified in the notice.
2. Place no further orders or subcontracts for materials, services, or facilities, other than as may be necessary or required for completion of such portion of work under the contract that is not terminated.
3. Immediately make every reasonable effort to obtain cancellation upon terms satisfactory to the City of Nashua of all orders or subcontracts to the extent they relate to the performance of work terminated, abandoned, or suspended under the notice, assign to the City of Nashua any orders or subcontracts specified in the notice, and revoke agreements specified in the notice.
4. Not resume work after the effective date of a notice of suspension until receipt of a written notice from the City of Nashua to resume performance.

In the event of a termination, abandonment, or suspension at will, Professional Engineer shall receive all amounts due and not previously paid to Professional Engineer for work satisfactorily completed in accordance with the contract prior to the date of the notice and compensation for work thereafter completed as specified in the notice. No amount shall be allowed or paid for anticipated profit on unperformed services or other unperformed work.

B. TERMINATION FOR CAUSE This agreement may be terminated by the City of Nashua on 10 calendar day's written notice to Professional Engineer in the event of a failure by Professional Engineer to adhere to any or all the terms and conditions of the contract or for failure to satisfactorily, in the sole opinion of the City of Nashua, to complete or make sufficient progress on the work in a timely and professional manner. Professional Engineer shall be given an opportunity for consultation with the City of Nashua prior to the effective date of the termination. Professional Engineer may terminate the contract on 10 calendar days written notice if, through no fault of Professional Engineer, the City of Nashua fails to pay Professional Engineer for 45 days after the date of approval by the City of Nashua of any Application for Payment.

Upon receipt of notice of termination for cause, Professional Engineer shall:

1. Immediately discontinue work on the date and to the extent specified in the notice.
2. Provide the City of Nashua with a list of all unperformed services.

3. Place no further orders or sub-contracts for materials, services, or facilities, other than as may be necessary or required for completion of such portion of work under the contract that is not terminated.
4. Immediately make every reasonable effort to obtain cancellation upon terms satisfactory to the City of Nashua of all orders or sub contracts to the extent they relate to the performance of work terminated, abandoned, or suspended under the notice, assign to the City of Nashua any orders or sub contracts specified in the notice, and revoke agreements specified in the notice.
5. Not resume work after the effective date of a notice of termination unless and until receipt of a written notice from the City of Nashua to resume performance.

In the event of a termination for cause, Professional Engineer shall receive all amounts due and not previously paid to Professional Engineer for work satisfactorily completed in accordance with the contract prior to the date of the notice, less all previous payments. No amount shall be allowed or paid for anticipated profit on unperformed services or other unperformed work. Any such payment may be adjusted to the extent of any additional costs occasioned to the City of Nashua by reasons of Professional Engineer's failure. Professional Engineer shall not be relieved of liability to the City of Nashua for damages sustained from the failure, and the City of Nashua may withhold any payment to the Professional Engineer until such time as the exact amount of damages due to the City of Nashua is determined. All claims for payment by the Professional Engineer must be submitted to the City of Nashua within 30 days of the effective date of the notice of termination.

If after termination for the failure of Professional Engineer to adhere to any of the terms and conditions of the contract or for failure to satisfactorily, in the sole opinion of the City of Nashua, to complete or make sufficient progress on the work in a timely and professional manner, it is determined that Professional Engineer had not so failed, the termination shall be deemed to have been a termination at will. In that event, the City of Nashua shall, if necessary, make an adjustment in the compensation paid to Professional Engineer such that Professional Engineer receives total compensation in the same amount as it would have received in the event of a termination-at-will.

C. General Provisions For Termination Upon termination of the contract, the City of Nashua may take over the work and prosecute it to completion by agreement with another party or otherwise. In the event Professional Engineer shall cease conducting business, the City of Nashua shall have the right to solicit applications for employment from any employee of the Professional Engineer assigned to the performance of the contract.
Neither party shall be considered in default of the performance of its obligations hereunder to the extent that performance of such obligations is prevented or delayed by any cause, existing or future, which is beyond the reasonable control of such party. Delays arising from the actions or inactions of one or more of Professional Engineer's principals, officers, employees, agents, subcontractors, consultants, vendors, or suppliers are expressly recognized to be within Professional Engineer's control.

9. **Dispute Resolution** The parties shall attempt to resolve any dispute related to this contract as follows. Either party shall provide to the other party, in writing and with full documentation to verify and substantiate its decision, its stated position concerning the dispute. No dispute shall be considered submitted and no dispute shall be valid under this provision unless and until the submitting party has delivered the written statement of its position and full documentation to the other party. The parties shall then attempt to resolve the dispute through good faith efforts and negotiation between the City of Nashua Representative and a Professional Engineer Representative. At all times, Professional Engineer shall carry on the work under this contract and maintain and complete work in accordance with the requirements of the contract or determination or direction of the City of Nashua. If the parties are unable to resolve their dispute

as described above within 30 days, the parties may request that the dispute be submitted to the Board of Public Works for resolution. If the parties are dissatisfied with the decision of the Board of Public Works, the parties' reserve the right to pursue any available legal and/or equitable remedies for any breaches of this contract except as that right may be limited by the terms of this contract.

10. **NO DAMAGES FOR DELAY** Apart from a written extension of time, no payment, compensation, or adjustment of any kind shall be made to Professional Engineer for damages because of hindrances or delays in the progress of the work from any cause, and Professional Engineer agrees to accept in full satisfaction of such hindrances and delays any extension of time that the City of Nashua may provide.

11. **INSURANCE** Professional Engineer shall carry and maintain in effect during the performance of services under this contract:

- General Liability insurance in the amount of $1,000,000 per occurrence; $2,000,000 aggregate;
- $1,000,000 Combined Single Limit Automobile Liability;
  ***Coverage must include all owned, non-owned and hired vehicles.**
- $1,000,000 Profession Liability;
- and Workers' Compensation Coverage in compliance with the State of New Hampshire statutes, $100,000/$500,000/$100,000.

Professional Engineer shall maintain in effect at all times during the performance under this contract all specified insurance coverage with insurers. None of the requirements as to types and limits to be maintained by Professional Engineer are intended to and shall not in any manner limit or qualify the liabilities and obligations assumed by Professional Engineer under this contract. The City of Nashua shall not maintain any insurance on behalf of Professional Engineer. Subcontractors are subject to the same insurance requirements as Professional Engineer and it shall be the Professional Engineer's responsibility to ensure compliance of this requirement.

Professional Engineer will provide the City of Nashua with certificates of insurance for coverage as listed below and endorsements affecting coverage required by the contract within ten calendar days after the City of Nashua issues the notice of award. The City of Nashua requires thirty days written notice of cancellation or material change in coverage. The certificates and endorsements for each insurance policy must be signed by a person authorized by the insurer and who is licensed by the State of New Hampshire. **General Liability and Auto Liability policies must name the City of Nashua as an additional insured** and reflect on the certificate of insurance. Professional Engineer is responsible for filing updated certificates of insurance with the City of Nashua's Risk Management Department during the life of the contract.

- All deductibles and self-insured retentions shall be fully disclosed in the certificate(s) of insurance.
- If aggregate limits of less than $2,000,000 are imposed on bodily injury and property damage, Professional Engineer must maintain umbrella liability insurance of at least $1,000,000. All aggregates must be fully disclosed on the required certificate of insurance.
- The specified insurance requirements do not relieve Professional Engineer of its responsibilities or limit the amount of its liability to the City of Nashua or other persons, and Professional Engineer is encouraged to purchase such additional insurance, as it deems necessary.

- The insurance provided herein is primary, and no insurance held or owned by the City of Nashua shall be called upon to contribute to a loss.
- Professional Engineer is responsible for and required to remedy all damage or loss to any property, including property of the City of Nashua, caused in whole or part by Professional Engineer or anyone employed, directed, or supervised by Professional Engineer.

12. **INDEMNIFICATION** Regardless of any coverage provided by any insurance, Professional Engineer agrees to indemnify and shall defend and hold harmless the City of Nashua, its agents, officials, employees and authorized representatives and their employees from and against any and all suits, causes of action, legal or administrative proceedings, arbitrations, claims, demands, damages, liabilities, interest, attorney's fees, costs and expenses of any kind or nature in any manner caused, occasioned, or contributed to in whole or in part by reason of any negligent act, omission, or fault or willful misconduct, whether active or passive, of Professional Engineer or of anyone acting under its direction or control or on its behalf in connection with or incidental to the performance of this contract. Professional Engineer's indemnity, defense and hold harmless obligations, or portions thereof, shall not apply to liability caused by the sole negligence or willful misconduct of the party indemnified or held harmless.

13. **FISCAL CONTINGENCY** All payments under this contract are contingent upon the availability to the City of Nashua of the necessary funds. This contract shall terminate and the City of Nashua's obligations under it shall be extinguished at the end of any fiscal year in which the City of Nashua fails to appropriate monies for the ensuing fiscal year sufficient for the performance of this contract.

    Nothing in this contract shall be construed to provide Professional Engineer with a right of payment over any other entity. Any funds obligated by the City of Nashua under this contract that are not paid to Professional Engineer shall automatically revert to the City of Nashua's discretionary control upon the completion, termination, or cancellation of the agreement. The City of Nashua shall not have any obligation to re-award or to provide, in any manner, the unexpended funds to Professional Engineer. Professional Engineer shall have no claim of any sort to the unexpended funds.

14. **COMPENSATION** Review by the City of Nashua of Professional Engineer's submitted monthly invoice forms and progress reports for payment will be promptly accomplished by the City of Nashua. If there is insufficient information, the City of Nashua may require Professional Engineer to submit additional information. Unless the City of Nashua, in its sole discretion, decides otherwise, the City of Nashua shall pay Professional Engineer in full within **30 days of approval** of the submitted monthly invoice forms and progress reports.

15. **COMPLIANCE WITH APPLICABLE LAWS** Professional Engineer, at all times, shall fully and completely comply with all applicable local, state and federal laws, statutes, regulations, ordinances, orders, or requirements of any sort in carrying out the obligations of this contract, including, but not limited to, all federal, state, and local accounting procedures and requirements, all immigration and naturalization laws, and the Americans With Disabilities Act. Professional Engineer shall, throughout the period services are to be performed under this contract, monitor for any changes to the applicable laws, statutes, regulations, ordinances, orders, or requirements, shall promptly notify the City of Nashua in writing of any changes to the same relating to or affecting this contract, and shall submit detailed documentation of any effect of the change in terms of both time and cost of performing the contract.

16. **NONDISCRIMINATION** If applicable or required under any federal or state law, statute, regulation, order, or other requirement, Professional Engineer agrees to the following terms. Professional Engineer will not discriminate against any employee or applicant for employment because of physical or mental handicap in regard to any position for which the employee or applicant for employment is qualified. Professional Engineer agrees to take affirmative action to employ, advance in employment, or to otherwise treat qualified, handicapped individuals without discrimination based upon physical or mental handicap in all employment practices, including but not limited to the following: employment, upgrading, demotion, transfer, recruitment, advertising, layoff, termination, rates of pay, or other forms of compensation and selection for training, including apprenticeship.

    Without limitation of the foregoing, Professional Engineer's attention is directed to "Title 41"Public Contracts and Property Management" C.F.R. Subtitle B "Other Provisions Relating to Public Contracts" Section 60 "Office of Federal Contract Compliance Programs, Equal Employment, Department of Labor" which, by this reference, is incorporated in this contract.

    Professional Engineer agrees to assist disadvantaged business enterprises in obtaining business opportunities by identifying and encouraging disadvantaged suppliers, consultants, and sub consultants to participate to the extent possible, consistent with their qualification, quality of work, and obligation of Professional Engineer under this contract.

    In connection with the performance of work under this contract, Professional Engineer agrees not to discriminate against any employee or applicant for employment because of race, creed, color, national origin, sex, age, or sexual orientation. This agreement includes, but is not limited to, the following: employment, upgrading, demotion or transfer, recruitment or recruitment advertising, layoff or termination, rates of pay or other forms of compensation, and selection for training, including apprenticeship.

    Professional Engineer agrees, if applicable, to insert these provisions in all subcontracts, except for subcontracts for standard commercial supplies or raw materials. Any violation of any applicable provision by Professional Engineer shall constitute a material breach of the contract.

17. **ENDORSEMENT** Professional Engineer shall seal and/or stamp and sign professional documents including drawings, plans, maps, reports, specifications, and other instruments of service prepared by Professional Engineer or under its direction as required under the laws of the State of New Hampshire.

18. **ASSIGNMENT, TRANSFER, DELEGATION, OR SUBCONTRACTING** Professional Engineer shall not assign, transfer, delegate, or subcontract any rights, obligations, or duties under this contract without the prior written consent of the City of Nashua. Any such assignment, transfer, delegation, or subcontracting without the prior written consent of the City of Nashua is void. Any consent of the City of Nashua to any assignment, transfer, delegation, or subcontracting shall only apply to the incidents expressed and provided for in the written consent and shall not be deemed to be a consent to any subsequent assignment, transfer, delegation, or subcontracting. Any such assignment, transfer, delegation, or subcontract shall require compliance with or shall incorporate all terms and conditions set forth in this agreement, including all incorporated Exhibits and written amendments or modifications. Subject to the foregoing provisions, the contract inures to the benefit of, and is binding upon, the successors and assigns of the parties.

19. **CITY INSPECTION OF CONTRACT MATERIALS** The books, records, documents and accounting procedures and practices of Professional Engineer related to this contract shall be subject to inspection, examination and audit by the City of Nashua, including, but not limited to, the contracting agency, the Board of Public Works, Corporation Counsel, and, if applicable, the Comptroller General of the United States, or any authorized representative of those entities.

20. **DISPOSITION OF CONTRACT MATERIALS** Any books, reports, studies, photographs, negatives or other documents, data, drawings or other materials, including but not limited to those contained in media of any sort (e.g., electronic, magnetic, digital) prepared by or supplied to Professional Engineer in the performance of its obligations under this contract shall be the exclusive property of the City of Nashua and all such materials shall be remitted and delivered, at Professional Engineer's expense, by Professional Engineer to the City of Nashua upon completion, termination, or cancellation of this contract. Alternatively, if the City of Nashua provides its written approval to Professional Engineer, any books, reports, studies, photographs, negatives or other documents, data, drawings or other materials including but not limited to those contained in media of any sort (e.g., electronic, magnetic, digital) prepared by or supplied to Professional Engineer in the performance of its obligations under this contract must be retained by Professional Engineer for a minimum of four years after final payment is made and all other pending matters are closed. If, at any time during the retention period, the City of Nashua, in writing, requests any or all of the materials, then Professional Engineer shall promptly remit and deliver the materials, at Professional Engineer's expense, to the City of Nashua. Professional Engineer shall not use, willingly allow or cause to have such materials used for any purpose other than the performance of Professional Engineer's obligations under this contract without the prior written consent of the City of Nashua.

21. **PUBLIC RECORDS LAW, COPYRIGHTS, AND PATENTS** Professional Engineer expressly agrees that all documents ever submitted, filed, or deposited with the City of Nashua by Professional Engineer (including those remitted to the City of Nashua by Professional Engineer pursuant to paragraph 20), unless designated as confidential by a specific statue of the State of New Hampshire, shall be treated as public records and shall be available for inspection and copying by any person, or any governmental entity.

    No books, reports, studies, photographs, negatives or other documents, data, drawings or other materials including but not limited to those contained in media of any sort (e.g., electronic, magnetic, digital) prepared by or supplied to Professional Engineer in the performance of its obligations under this contract shall be the subject of any application for a copyright or patent by or on behalf of Professional Engineer. The City of Nashua shall have the right to reproduce any such materials.

    Professional Engineer expressly and indefinitely waives all of its rights to bring, including but not limited to, by way of complaint, interpleader, intervention, or any third party practice, any claims, demands, suits, actions, judgments, or executions, for damages or any other relief, in any administrative or judicial forum, against the City of Nashua or any of its officers or employees, in either their official or individual capacity of the City of Nashua, for violations of or infringement of the copyright or patent laws of the United States or of any other nation. Professional Engineer agrees to indemnify, to defend, and to hold harmless the City of Nashua, its representatives, and employees from any claim or action seeking to impose liability, costs, and attorney fees incurred as a result of or in connection with any claim, whether rightful or otherwise, that any material prepared by or supplied to Professional Engineer infringes any copyright or that any equipment, material, or process (or any part thereof) specified by Professional Engineer infringes any patent.

    Professional Engineer shall have the right, in order to avoid such claims or actions, to substitute at its expense non-infringing materials, concepts, products, or processes, or to modify such infringing materials, concepts, products, or processes so they become non-infringing, or to obtain the necessary licenses to use the infringing materials, concepts, products, or processes, provided that such substituted or modified materials, concepts, products, or processes shall meet all the requirements and be subject to all the terms and conditions of this contract.

22. **FINAL ACCEPTANCE** Upon completion of all work under the contract, Professional Engineer shall notify the City of Nashua in writing of the date of the completion of the work and request confirmation of the completion from the City of Nashua. Upon receipt of the notice, the City of Nashua shall confirm to Professional Engineer in writing that the whole of the work was completed on the date indicated in the notice or provide Professional Engineer with a written list of work not completed. With respect to work listed by the City of Nashua as incomplete, Professional Engineer shall promptly complete the work and the final acceptance procedure shall be repeated. The date of final acceptance of a project by the City of Nashua shall be the date upon which the Board of Public Works or other designated official accepts and approves the notice of completion.

23. **TAXES** Professional Engineer shall pay all taxes, levies, duties, and assessments of every nature due in connection with any work performed under the contract and make any and all payroll deductions required by law. The contract sum and agreed variations to it shall include all taxes imposed by law. Professional Engineer hereby indemnifies and holds harmless the City of Nashua from any liability on account of any and all such taxes, levies, duties, assessments, and deductions.

24. **NON-WAIVER OF TERMS AND CONDITIONS** None of the terms and conditions of this contract shall be considered waived by the City of Nashua. There shall be no waiver of any past or future default, breach, or modification of any of the terms and conditions of the contract unless expressly stipulated to by the City of Nashua in a written waiver.

25. **RIGHTS AND REMEDIES** The duties and obligations imposed by the contract and the rights and remedies available under the contract shall be in addition to and not a limitation of any duties, obligations, rights, and remedies otherwise imposed or available by law.

26. **PROHIBITED INTERESTS** Professional Engineer shall not allow any officer or employee of the City of Nashua to have any indirect or direct interest in this contract or the proceeds of this contract. Professional Engineer warrants that no officer or employee of the City of Nashua has any direct or indirect interest, whether contractual, noncontractual, financial or otherwise, in this contract or in the business of Professional Engineer. If any such interest comes to the attention of Professional Engineer at any time, a full and complete disclosure of the interest shall be immediately made in writing to the City of Nashua. Professional Engineer also warrants that it presently has no interest and that it will not acquire any interest, direct or indirect, which would conflict in any manner or degree with the performance of services required to be performed under this contract. Professional Engineer further warrants that no person having such an interest shall be employed in the performance of this contract. If City of Nashua determines that a conflict exists and was not disclosed to the City of Nashua, it may terminate the contract at will or for cause in accordance with paragraph 8.

    In the event Professional Engineer (or any of its officers, partners, principals, or employees acting with its authority) is convicted of a crime involving a public official arising out or in connection with the procurement of work to be done or payments to be made under this contract, City of Nashua may terminate the contract at will or for cause in accordance with paragraph 8. Upon termination, Professional Engineer shall refund to the City of Nashua any profits realized under this contract, and Professional Engineer shall be liable to the City of Nashua for any costs incurred by the City of Nashua in completing the work described in this contract. At the discretion of the City of Nashua, these sanctions shall also be applicable to any such conviction obtained after the expiration or completion of the contract.

    Professional Engineer warrants that no gratuities (including, but not limited to, entertainment or gifts) were offered or given by Professional Engineer to any officer or employee of the City of Nashua with a view toward securing a contract or securing favorable treatment with respect to the

awarding or amending or making of any determinations with respect to the performance of this contract. If City of Nashua determines that such gratuities were or offered or given, it may terminate the contract at will or for cause in accordance with paragraph 8.

The rights and remedies of this section shall in no way be considered for be construed as a waiver of any other rights or remedies available to the City of Nashua under this contract or at law.

27. **THIRD PARTY INTERESTS AND LIABILITIES** The City of Nashua and Professional Engineer, including any of their respective agents or employees, shall not be liable to third parties for any act or omission of the other party. This contract is not intended to create any rights, powers, or interest in any third party and this agreement is entered into for the exclusive benefit of the City of Nashua and Professional Engineer.

28. **SURVIVAL OF RIGHTS AND OBLIGATIONS** The rights and obligations of the parties that by their nature survive termination or completion of this contract shall remain in full force and effect.

29. **SEVERABILITY** In the event that any provision of this contract is rendered invalid or unenforceable by any valid act of Congress or of the New Hampshire legislature or any court of competent jurisdiction, or is found to be in violation of state statutes or regulations, the invalidity or unenforceability of any particular provision of this contract shall not affect any other provision, the contract shall be construed as if such invalid or unenforceable provisions were omitted, and the parties may renegotiate the invalid or unenforceable provisions for sole purpose of rectifying the invalidity or unenforceability.

30. **MODIFICATION OF CONTRACT AND ENTIRE AGREEMENT** This contract constitutes the entire contract between the City of Nashua and Professional Engineer. The parties shall not be bound by or be liable for any statement, representation, promise, inducement, or understanding of any kind or nature not set forth in this contract. No changes, amendments, or modifications of any terms or conditions of the contract shall be valid unless reduced to writing and signed by both parties.

31. **CHOICE OF LAW AND VENUE** This contract shall be governed exclusively by the laws of the State of New Hampshire and any claim or action brought relating to this contract, the work performed or contracted to be performed thereunder, or referable in anyway thereto shall be brought in Hillsborough County (New Hampshire) Superior Court Southern Judicial District or in the New Hampshire 9th Circuit Court—Nashua and not elsewhere.

EXHIBIT B

May 5, 2016

Mr. Joe Mendola
City of Nashua
Division of Public Works
9 Riverside Street
Nashua, NH 03062

Re: Recreation Trail over US 3 Bridge Repairs
Scope of Work and Fee Proposal
CLD Reference No. P16-0186

Dear Mr. Mendola:

CLD Consulting Engineers, Inc. (CLD) is pleased to submit our enclosed Scope of Work and Fee Proposal to provide bridge engineering services for the City of Nashua for the repairs of the Recreation Trail Bridge over US 3. The work will include:

- Concrete repairs to the pier cap/bearing seat of the first pier from the northern abutment (pier 1).
- Bid Alternates for additional work including:
  - Concrete repairs to the northern abutment backwall
  - Concrete repairs to the eastern curb on the span over the highway
  - Concrete deck repairs in the vicinity of pier 1
  - Re-grading/paving of the northern approach walkway.

Please find enclosed with this scope letter:

- Task List with Estimated Hours and Fee; and
- Municipal Contracts.

The scope for the bridge repair work shall include:

- **Preparation of Construction Details:** CLD will prepare details for all repairs, including all the above bid alternates. CLD anticipates making one submission to the City for review. CLD will revise the details based on the City's comments.
- **Preparation of Contract Documents:** CLD will prepare the Contract Documents, which will include the bid form, contract agreement, general conditions and special conditions, project specifications, and special provisions. All documents will be submitted to the City for review.
- **Bidding Assistance:** CLD will advertise the project in one newspaper, and provide bid sets to prospective bidders. CLD will answer contractor questions during the advertising period and issue addenda, if needed. CLD will prepare a tabulation of the bids received, evaluate the bids and recommend award.

- **Construction Inspection and Administration:** CLD will provide consultation regarding design intent or clarification of the plans and specifications. Shop drawings for this project are not anticipated. CLD will conduct periodic field inspection to ensure work conforms to the Contract Documents. Field visits will be based on the work being completed.

  Per the Contract Documents (to be developed for the project), CLD (herein known as the Engineer) will make visits to the site at intervals appropriate to the various stages of construction as the Engineer deems necessary in order to observe the progress that has been made and the quality of the various aspects of Contractor's executed work. Observations and site visits will be limited to the total time amounts discussed above and in the Fee Estimate unless a further amendment is agreed to. Based on information obtained during such visits and observations, the Engineer, for the benefit of Municipality, will determine, in general, if the Work is proceeding in accordance with the Contract Documents. Engineer will not be required to make exhaustive or continuous observations on the site to check the quality or quantity of the Work. Engineer's efforts will be directed toward providing for the Municipality a greater degree of confidence that the completed Work will conform generally to the Contract Documents. On the basis of such visits and observations, Engineer will keep Municipality informed of the progress of the Work and will endeavor to guard Municipality against defective work.

  Engineer's visits and observations are subject to all the limitations on Engineer's authority and responsibility set forth in Article 7 of the Contract Documents, and particularly, but without limitation, during or as a result of Engineer's visits or observations of Contractor's Work. Engineer will not supervise, direct, control, or have authority over or be responsible for Contractor's means, methods, techniques, sequences, procedures of construction, or the safety precautions and programs incident thereto, or for any failure of Contractor to comply with Laws and Regulations applicable to the performance of the Work.

We look forward to working with you and City of Nashua on this project. Please contact us if you have questions or require additional information.

Very truly yours,

Jaime French

Jaime French, P.E.
Project Manager

JF:jt

Enclosures

Cost Estimate

CITY OF NASHUA

BRIDGE REPAIR CONTRACT

	ESTIMATED WORK HOURS						
	Project Manager	QA/QC Sr. Eng.	Project Engineer	Engineer	Tech.	Tech. Typist	Total Hours
Prepare Construction Details		4	16	32	24		76
Prepare Quantities and Estimate		1	4	8			13
Prepare Contract Documents	1	4	16			4	25
Bidding Assistance							
Advertise Project			1			2	3
Contract Document Preparation and Sales	1					3	4
Contractor Inquiries & Addenda	1		2	2		1	6
Bid Opening Meeting	2						2
Review Bids, Quantities & Contractor	1	1	3			2	7
Prepare Contracts, NOA, NTP, Insurance & Bond Review	2		2			6	10
Construction Inspection/Administration (8 site visits)	1		8	32			41
Project Administration & Coordination with City (Assume 1 meeting)	2	2	4			1	9
Hour Subtotal:	**11**	**12**	**56**	**74**	**24**	**19**	**196**

ESTIMATED ENGINEERING COSTS

	Work Hours	Estimated Hourly Rate	Estimated Costs
Project Manager	11	$39.50	$ 435
QC/QA & Senior Engineer	12	46.51	558
Project Engineer	56	39.50	2,212
Engineer	74	34.48	2,552
Technician	24	25.15	604
Technical Typist	19	21.34	405
	196	Total Direct Labor	$ 6,766
		Indirect Costs @ 1.434	9,702
		Subtotal	$16,468
		Fixed Fee	$ 1,647
		Subtotal	$18,115
		Direct Costs	$ 1,015
		TOTAL ESTIMATED COST:	**$19,130**

DIRECT COSTS

CITY OF NASHUA
BRIDGE REPAIR CONTRACT

Mileage

	No. Trips	Miles (round trip)	Rate per Mile	Total
Survey		36	$ 0.540	$ -
Road/Bridge	8	36	$ 0.540	$ 155.52
Environmental		36	$ 0.540	$ -
Meetings	2	36	$ 0.540	$ 38.88
				$ 194.40

Reproductions

	No. Sets**	Plans per Set	Rate / Sheet	Total
Full Size	10	5	$ 1.10	$ 55.00
11x17	5	5	$ 0.30	$ 7.50
8.5x11	15	100	$ 0.15	$ 225.00
				$ 287.50
Shipping				$25

** includes progress prints

Grand Total	$	506.90
Advertising	$	500.00
total	$	1,006.90
SAY	$	1,015.00

THE CITY OF NASHUA
Financial Services
Purchasing Department

"The Gate City"

December 1, 2016
Memo #17-082

TO: MAYOR DONCHESS
FINANCE COMMITTEE

SUBJECT: POST CONSTRUCTION PHASE MANAGEMENT FOR BROAD STREET PARKWAY
(VALUE: NOT TO EXCEED $120,000)
DEPARTMENT: 160 ADMIN/ENGINEERING; FUND: BOND
ACTIVITY: BROAD STREET PARKWAY

Please see the attached communication from Stephen Dookran, P.E., City Engineer, dated November 21, 2016 for the information related to this purchase.

Pursuant to NRO **§ 5-83 Professional Services** (A) In the purchase of accounting, architectural, auditing, engineering, legal, medical and ambulance services and purchases of independent professional consultant services for personnel, data processing, actuarial, planning, management and other comparable purchases competitive bidding shall not be required.

The City Engineer, Board of Public Works (11/21/2016 meeting) and the Purchasing Department recommend this contract award in an amount not to exceed **$120,000** to **Hayner/Swanson, Inc.** of **Nashua, NH.**

Respectfully,

Dan Kooken
Purchasing Manager

Cc: S Dookran L Fauteux

229 Main Street • Nashua, New Hampshire 03061 • Phone (603) 589-3330 • Fax (603) 589-3344

City of Nashua, Public Works Division

To: Board of Public Works Meeting Date: November 21, 2016

From: Stephen Dookran, P.E., City Engineer
Engineering Department

Re: Civil Engineering Services for Post Construction Phase Management and Administration Support by Hayner/Swanson, Inc. (HSI) for the Broad Street Parkway Project.

F. Motion: To approve a professional services contract with Hayner/Swanson, Inc. of Nashua, NH to perform Project Wide Management Support for the Broad Street Parkway in the amount not to exceed $120,000. Funding for this contract is through Department 160 Engineering; Fund: Bond; Activity: Broad Street Parkway.

Attachment: Summary of Fee

Discussion: Hayner/Swanson, Inc. (HSI) has provided services throughout the planning, design and construction phases of the Broad Street Parkway.

HSI's budget for construction phase services is nearly expended. This budget was established in Fall 2013 based on an assumption that the parkway would be open to traffic by May 1, 2015. Beyond the control of HSI and the City, the project did not open until December 19, 2015. It is noted that HSI was able to carry this budget without increase even with this longer construction as well as numerous unforeseen tasks related to asbestos, federal funding and complexities of right-of-way acquisition. The City has requested a proposal from HSI to perform several post-construction tasks associated with the project closeout. In some cases, HSI has been asked to establish allowances for several possible tasks; these allowances will not be used unless HSI is directed by the City. These tasks and allowances are identified on the attached spreadsheet and include:

1. HSI's support is needed in the ongoing effort to assure that all programmed federal funding for the parkway are spent on City projects including $4.4 million presently being repurposed by FHWA.
2. A number of concerns remain related to finalization of various right-of-way acquisitions. In some cases these tasks are related to sale of surplus property.
3. Various activities related to contract closeout and completion of City project commitments.
4. Support to the City related to several claims, notably including a contractor's claim for $1.4 million related to construction of the River Bridge. Other outstanding claims involve property acquisitions.

CONTRACT FOR PROFESSIONAL SERVICES

TITLE

A CONTRACT BETWEEN

THE CITY OF NASHUA, 229 MAIN STREET, NASHUA, NH 03061-2019
AND

HAYNER/SWANSON, INC.
and its successors, transferees and assignees (together "Professional Engineer")
NAME AND TITLE OF PROFESSIONAL ENGINEER

3 CONGRESS STREET
NASHUA, NH 03062
ADDRESS OF PROFESSIONAL ENGINEER

WHEREAS, the City of Nashua, a political subdivision of the State of New Hampshire, from time to time requires the services of a Professional Engineer ; and

WHEREAS, it is deemed that the services of a Professional Engineer herein specified are both necessary and desirable and in the best interests of the City of Nashua; and

WHEREAS, Professional Engineer represents they are duly qualified, equipped, staffed, ready, willing and able to perform and render the services hereinafter described;

NOW, THEREFORE, in consideration of the agreements herein made, the parties mutually agree as follows:

1. DOCUMENTS INCORPORATED. The following exhibits are by this reference incorporated herein and are made part of this contract:

Exhibit A--General Conditions for Contracts
Exhibit B--Scope of Services, Contract Time, Fee Schedule

The Contract represents the entire and integrated agreement between the parties and supersedes prior negotiations, proposals, representations or agreements, either written or oral. Any other documents which are not listed in this Article are not part of the Contract.

In the event of a conflict between the terms of the Proposal and the terms of this Agreement, a written change order and/or fully executed City of Nashua Purchase Order, the terms of this Agreement, the written change order or the fully executed City of Nashua Purchase Order shall control over the terms of the Proposal.

2. WORK TO BE PERFORMED Except as otherwise provided in this contract, Professional Engineer shall furnish all services, equipment, and materials and shall perform all operations necessary and required to carry out and perform in accordance with the terms and conditions of the contract the work described.

DRAFT

3. PERIOD OF PERFORMANCE. Professional Engineer shall perform and complete all work within the time periods set forth and may only be altered by the parties by a written agreement to extend the period of performance or by termination in accordance with the terms of the contract. Professional Engineer shall begin performance upon receipt of an Executed Contract **and** a valid Purchase Order issued from the City of Nashua.

4. COMPENSATION. Professional Engineer agrees to perform the work for a total cost not to exceed
ONE HUNDRED TWENTY THOUSAND DOLLARD ($ 120,000.00)

which, unless otherwise provided in this contract, shall be paid in accordance with the provisions of Exhibit B or unless Professional Engineer has received a written exemption from the City of Nashua. Professional Engineer shall submit monthly requests for payment for services performed under this agreement directly to

City of Nashua
Attn: Accounts Payable
PO Box 2019
Nashua, NH 03061-2019
Atten: Stephen Dookran P.E., City Engineer

To facilitate the proper and timely payment of applications, the City of Nashua requires that all invoices contain a valid **PURCHASE ORDER NUMBER**.

Requests for payment shall be submitted no later than fifteen (15) days after the end of each month and must include a detailed summary of the expenditures reported in a form that supports the approved budget. Specifically, Professional Engineer agrees to provide the following with each request for payment:

1. Appropriate invoice forms. The forms shall include the project purchase order number, a listing of personnel hours and billing rates, and other expenditures for which payment is sought.

2. A progress report. The report shall include, for each monthly reporting period, a description of the work accomplished, problems experienced, upcoming work, any extra work carried out, and a schedule showing actual expenditures billed for the period, cumulative total expenditures billed and paid to date under the contract, and a comparison of cumulative total expenditures billed and paid to the approved budget.

The City of Nashua will pay for work satisfactorily completed by Professional Engineer. The City of Nashua will pay Professional Engineer within **30** days of approval by the City of Nashua of the submitted invoice forms and progress reports. The City of Nashua will make no payments until the invoice forms and progress reports have been submitted and approved.

5. EFFECTIVE DATE OF CONTRACT. This contract shall not become effective until and unless approved by the City of Nashua.

6. NOTICES. All notices, requests, or approvals required or permitted to be given under this contract shall be in writing, shall be sent by hand delivery, overnight carrier, or by United States mail, postage prepaid, and registered or certified, and shall be addressed to:

DRAFT

CITY OF NASHUA REPRESENTATIVE:	REPRESENTATIVE:
Stephen Dookran, P.E. – City Engineer	John Vancor, P.E. – Principle Engineer
Division of Public Works, Engineering	Hayner/Swanson, Inc.
9 Riverside Street	3 Congress Street
Nashua, NH 03062	Nashua, NH 03062

Any notice required or permitted under this contract, if sent by United States mail, shall be deemed to be given to and received by the addressee thereof on the third business day after being deposited in the mail. The City of Nashua or Professional Engineer may change the address or representative by giving written notice to the other party.

IN WITNESS WHEREOF, the parties hereto have caused this contract to be signed and intend to be legally bound thereby.

City of Nashua, NH (signature)	***Hayner/Swanson, Inc (signature)***
James Donchess, Mayor	
(Printed Name and Title)	***(Printed Name and Title)***
Date	***Date***

DRAFT

EXHIBIT A
TABLE OF CONTENTS
GENERAL CONDITIONS

1.	DEFINITIONS	GC--2
2.	PROFESSIONAL ENGINEER STATUS	GC--2
3.	STANDARD OF CARE	GC--2
4.	CITY OF NASHUA REPRESENTATIVE	GC--3
5.	CHANGES TO SCOPE OF WORK	GC--3
6.	CITY OF NASHUA COOPERATION	GC--3
7.	DISCOVERY OF CONFLICTS, ERRORS, OMISSIONS, AMBIGUITIES, OR DISCREPANCIES	GC--3
8.	TERMINATION OF CONTRACT	GC--4
9.	DISPUTE RESOLUTION	GC--5
10.	NO DAMAGES FOR DELAY	GC--6
11.	INSURANCE	GC--6
12.	INDEMNIFICATION	GC--7
13.	FISCAL CONTINGENCY	GC--7
14.	COMPENSATION	GC--7
15.	COMPLIANCE WITH APPLICABLE LAWS	GC--7
16.	NONDISCRIMINATION	GC--8
17.	ENDORSEMENT	GC--8
18.	ASSIGNMENTS, TRANSFER, DELEGATION, OR SUBCONTRACTING	GC--8
19.	CITY INSPECTION OF CONTRACT MATERIALS	GC--9
20.	DISPOSITION OF CONTRACT MATERIALS	GC--9
21.	PUBLIC RECORDS LAW, COPYRIGHTS, AND PATENTS	GC--9
22.	FINAL ACCEPTANCE	GC--10
23.	TAXES	GC--10
24.	NON-WAIVER OF TERMS AND CONDITIONS	GC--10
25.	RIGHTS AND REMEDIES	GC--10
26.	PROHIBITED INTERESTS	GC--10
27.	THIRD PARTY INTERESTS AND LIABILITIES	GC--11
28.	SURVIVAL OF RIGHTS AND OBLIGATIONS	GC--11
29.	SEVERABILITY	GC--11
30.	MODIFICATION OF CONTRACT AND ENTIRE AGREEMENT	GC--11
31.	CHOICE OF LAW AND VENUE	GC--11

DRAFT

General Terms and Conditions

1. **DEFINITIONS** Unless otherwise required by the context, "Professional Engineer", and its successors, transferees and assignees (together "Professional Engineer") includes any of the Professional Engineer's consultants, sub consultants, contractors, and subcontractors

2. **PROFESSIONAL ENGINEER STATUS** The parties agree that Professional Engineer shall have the status of and shall perform all work under this contract as a Professional Engineer, maintaining control over all its consultants, sub consultants, contractors, or subcontractors. The only contractual relationship created by this contract is between the City of Nashua and Professional Engineer, and nothing in this contract shall create any contractual relationship between the City of Nashua and Professional Engineer's consultants, sub consultants, contractors, or subcontractors. The parties also agree that Professional Engineer is not a City of Nashua employee and that there shall be no:

   (1) Withholding of income taxes by the City of Nashua:
   (2) Industrial insurance coverage provided by the City of Nashua;
   (3) Participation in group insurance plans which may be available to employees of the City of Nashua;
   (4) Participation or contributions by either the Professional Engineer or the City of Nashua to the public employee's retirement system;
   (5) Accumulation of vacation leave or sick leave provided by the City of Nashua;
   (6) Unemployment compensation coverage provided by the City of Nashua.

3. **STANDARD OF CARE** Professional Engineer shall be responsible for the professional quality, technical accuracy, timely completion, and coordination of all work performed under this contract. Professional Engineer warrants that all work shall be performed with the degree of professional skill, care, diligence, and sound practices and judgment that are normally exercised by recognized professional firms with respect to services of a similar nature. It shall be the duty of Professional Engineer to assure at its own expense that all work is technically sound and in conformance with all applicable federal, state, and local laws, statutes, regulations, ordinances, orders, or other requirements. In addition to all other rights which the City of Nashua may have, Professional Engineer shall, at its own expense and without additional compensation, re-perform work to correct or revise any deficiencies, omissions, or errors in the work or the product of the work or which result from Professional Engineer's failure to perform in accordance with this standard of care. Any approval by the City of Nashua of any products or services furnished or used by Professional Engineer shall not in any way relieve Professional Engineer of the responsibility for professional and technical accuracy and adequacy of its work. City of Nashua review, approval, or acceptance of, or payment for any of Professional Engineer's work under this contract shall not operate as a waiver of any of the City of Nashua's rights or causes of action under this contract, and Professional Engineer shall be and remain liable in accordance with the terms of the contract and applicable law.

   Professional Engineer shall furnish competent and skilled personnel to perform the work under this contract. The City of Nashua reserves the right to approve key personnel assigned by Professional Engineer to perform work under this contract. Approved key personnel shall not be taken off of the project by Professional Engineer without the prior written approval of the City of Nashua, except in the event of termination of employment. Professional Engineer shall, if requested to do so by the City of Nashua, remove from the job any personnel whom the City of Nashua determines to be incompetent, dishonest, or uncooperative.

DRAFT

4. **CITY OF NASHUA REPRESENTATIVE** The City of Nashua may designate a City of Nashua representative for this contract. If designated, all notices, project materials, requests by Professional Engineer, and any other communication about the contract shall be addressed or be delivered to the City of Nashua Representative.

5. **CHANGES TO SCOPE OF WORK** The City of Nashua may, at any time, by written order, make changes to the general scope, character, or cost of this contract and in the services or work to be performed, either increasing or decreasing the scope, character, or cost of Professional Engineer's performance under the contract. Professional Engineer shall provide to the City of Nashua within 10 calendar days, a written proposal for accomplishing the change. The proposal for a change shall provide enough detail, including personnel hours for each sub-task and cost breakdowns of tasks, for the City of Nashua to be able to adequately analyze the proposal. The City of Nashua will then determine in writing if Professional Engineer should proceed with any or all of the proposed change. If the change causes an increase or a decrease in Professional Engineer's cost or time required for performance of the contract as a whole, an equitable adjustment shall be made and the contract accordingly modified in writing. Any claim of Professional Engineer for adjustment under this clause shall be asserted in writing within 30 days of the date the City of Nashua notified Professional Engineer of the change.

   When Professional Engineer seeks changes, Professional Engineer shall, before any work commences, estimate their effect on the cost of the contract and on its schedule and notify the City of Nashua in writing of the estimate. The proposal for a change shall provide enough detail, including personnel hours for each sub-task and cost breakdowns of tasks, for the City of Nashua to be able to adequately analyze the proposal. The City of Nashua will then determine in writing if Professional Engineer should proceed with any or all of the proposed change.

   Except as provided in this paragraph, Professional Engineer shall implement no change unless the City of Nashua in writing approves the change. Unless otherwise agreed to in writing, the provisions of this contract shall apply to all changes. The City of Nashua may provide verbal approval of a change when the City of Nashua, in its sole discretion, determines that time is critical or public health and safety are of concern. Any verbal approval shall be confirmed in writing as soon as practicable. Any change undertaken without prior City of Nashua approval shall not be compensated and is, at the City of Nashua's election, sufficient reason for contract termination.

6. **CITY OF NASHUA COOPERATION** The City of Nashua agrees that its personnel will cooperate with Professional Engineer in the performance of its work under this contract and that such personnel will be available to Professional Engineer for consultation at reasonable times and after being given sufficient advance notice that will prevent conflict with their other responsibilities. The City of Nashua also agrees to provide Professional Engineer with access to City of Nashua records in a reasonable time and manner and to schedule items that require action by the Board of Public Works and Finance Committee in a timely manner. The City of Nashua and Professional Engineer also agree to attend all meetings called by the City of Nashua or Professional Engineer to discuss the work under the Contract, and that Professional Engineer may elect to conduct and record such meetings and shall later distribute prepared minutes of the meeting to the City of Nashua.

7. **DISCOVERY OF CONFLICTS, ERRORS, OMISSIONS, AMBIGUITIES, OR DISCREPANCIES** Professional Engineer warrants that it has examined all contract documents, has brought all conflicts, errors, discrepancies, and ambiguities to the attention of the City of Nashua in writing, and has concluded that the City of Nashua's resolution of each matter is satisfactory to Professional Engineer. All future questions Professional Engineer may have concerning interpretation or clarification of this contract shall be submitted in writing to the City of Nashua within 10 calendar days of their arising. The writing shall state clearly and in full detail the basis for Professional Engineer's question or position. The City of Nashua representative shall render a

DRAFT

decision within 15 calendar days. The City of Nashua's decision on the matter is final. Any work affected by a conflict, error, omission, or discrepancy which has been performed by Professional Engineer prior to having received the City of Nashua's resolution shall be at Professional Engineer's risk and expense. At all times, Professional Engineer shall carry on the work under this contract and maintain and complete work in accordance with the requirements of the contract or determination of the City of Nashua. Professional Engineer is responsible for requesting clarification or interpretation and is solely liable for any cost or expense arising from its failure to do so.

8. **TERMINATION OF CONTRACT**

A. TERMINATION, ABANDONMENT, OR SUSPENSION AT WILL. The City of Nashua, in its sole discretion, shall have the right to terminate, abandon, or suspend all or part of the project and contract at will. If the City of Nashua chooses to terminate, abandon, or suspend all or part of the project, it shall provide Professional Engineer 10 day's written notice of its intent to do so.

If all or part of the project is suspended for more than 90 days, the suspension shall be treated as a termination at will of all or part of the project and contract.

Upon receipt of notice of termination, abandonment, or suspension at will, Professional Engineer shall:

1. Immediately discontinue work on the date and to the extent specified in the notice.
2. Place no further orders or subcontracts for materials, services, or facilities, other than as may be necessary or required for completion of such portion of work under the contract that is not terminated.
3. Immediately make every reasonable effort to obtain cancellation upon terms satisfactory to the City of Nashua of all orders or subcontracts to the extent they relate to the performance of work terminated, abandoned, or suspended under the notice, assign to the City of Nashua any orders or subcontracts specified in the notice, and revoke agreements specified in the notice.
4. Not resume work after the effective date of a notice of suspension until receipt of a written notice from the City of Nashua to resume performance.

In the event of a termination, abandonment, or suspension at will, Professional Engineer shall receive all amounts due and not previously paid to Professional Engineer for work satisfactorily completed in accordance with the contract prior to the date of the notice and compensation for work thereafter completed as specified in the notice. No amount shall be allowed or paid for anticipated profit on unperformed services or other unperformed work.

B. TERMINATION FOR CAUSE This agreement may be terminated by the City of Nashua on 10 calendar day's written notice to Professional Engineer in the event of a failure by Professional Engineer to adhere to any or all the terms and conditions of the contract or for failure to satisfactorily, in the sole opinion of the City of Nashua, to complete or make sufficient progress on the work in a timely and professional manner. Professional Engineer shall be given an opportunity for consultation with the City of Nashua prior to the effective date of the termination. Professional Engineer may terminate the contract on 10 calendar days written notice if, through no fault of Professional Engineer, the City of Nashua fails to pay Professional Engineer for 45 days after the date of approval by the City of Nashua of any Application for Payment.

Upon receipt of notice of termination for cause, Professional Engineer shall:

1. Immediately discontinue work on the date and to the extent specified in the notice.
2. Provide the City of Nashua with a list of all unperformed services.

3. Place no further orders or sub-contracts for materials, services, or facilities, other than as may be necessary or required for completion of such portion of work under the contract that is not terminated.
4. Immediately make every reasonable effort to obtain cancellation upon terms satisfactory to the City of Nashua of all orders or sub contracts to the extent they relate to the performance of work terminated, abandoned, or suspended under the notice, assign to the City of Nashua any orders or sub contracts specified in the notice, and revoke agreements specified in the notice.
5. Not resume work after the effective date of a notice of termination unless and until receipt of a written notice from the City of Nashua to resume performance.

In the event of a termination for cause, Professional Engineer shall receive all amounts due and not previously paid to Professional Engineer for work satisfactorily completed in accordance with the contract prior to the date of the notice, less all previous payments. No amount shall be allowed or paid for anticipated profit on unperformed services or other unperformed work. Any such payment may be adjusted to the extent of any additional costs occasioned to the City of Nashua by reasons of Professional Engineer's failure. Professional Engineer shall not be relieved of liability to the City of Nashua for damages sustained from the failure, and the City of Nashua may withhold any payment to the Professional Engineer until such time as the exact amount of damages due to the City of Nashua is determined. All claims for payment by the Professional Engineer must be submitted to the City of Nashua within 30 days of the effective date of the notice of termination.

If after termination for the failure of Professional Engineer to adhere to any of the terms and conditions of the contract or for failure to satisfactorily, in the sole opinion of the City of Nashua, to complete or make sufficient progress on the work in a timely and professional manner, it is determined that Professional Engineer had not so failed, the termination shall be deemed to have been a termination at will. In that event, the City of Nashua shall, if necessary, make an adjustment in the compensation paid to Professional Engineer such that Professional Engineer receives total compensation in the same amount as it would have received in the event of a termination-at-will.

C. General Provisions For Termination Upon termination of the contract, the City of Nashua may take over the work and prosecute it to completion by agreement with another party or otherwise. In the event Professional Engineer shall cease conducting business, the City of Nashua shall have the right to solicit applications for employment from any employee of the Professional Engineer assigned to the performance of the contract.
Neither party shall be considered in default of the performance of its obligations hereunder to the extent that performance of such obligations is prevented or delayed by any cause, existing or future, which is beyond the reasonable control of such party. Delays arising from the actions or inactions of one or more of Professional Engineer's principals, officers, employees, agents, subcontractors, consultants, vendors, or suppliers are expressly recognized to be within Professional Engineer's control.

9. **Dispute Resolution** The parties shall attempt to resolve any dispute related to this contract as follows. Either party shall provide to the other party, in writing and with full documentation to verify and substantiate its decision, its stated position concerning the dispute. No dispute shall be considered submitted and no dispute shall be valid under this provision unless and until the submitting party has delivered the written statement of its position and full documentation to the other party. The parties shall then attempt to resolve the dispute through good faith efforts and negotiation between the City of Nashua Representative and a Professional Engineer Representative. At all times, Professional Engineer shall carry on the work under this contract and maintain and complete work in accordance with the requirements of the contract or determination or direction of the City of Nashua. If the parties are unable to resolve their dispute

as described above within 30 days, the parties may request that the dispute be submitted to the Board of Public Works for resolution. If the parties are dissatisfied with the decision of the Board of Public Works, the parties' reserve the right to pursue any available legal and/or equitable remedies for any breaches of this contract except as that right may be limited by the terms of this contract.

10. **NO DAMAGES FOR DELAY** Apart from a written extension of time, no payment, compensation, or adjustment of any kind shall be made to Professional Engineer for damages because of hindrances or delays in the progress of the work from any cause, and Professional Engineer agrees to accept in full satisfaction of such hindrances and delays any extension of time that the City of Nashua may provide.

11. **INSURANCE** Professional Engineer shall carry and maintain in effect during the performance of services under this contract:

- General Liability insurance in the amount of $1,000,000 per occurrence; $2,000,000 aggregate;
- $1,000,000 Combined Single Limit Automobile Liability;
  ***Coverage must include all owned, non-owned and hired vehicles.**
- $1,000,000 Profession Liability;
- and Workers' Compensation Coverage in compliance with the State of New Hampshire statutes, $100,000/$500,000/$100,000.

Professional Engineer shall maintain in effect at all times during the performance under this contract all specified insurance coverage with insurers. None of the requirements as to types and limits to be maintained by Professional Engineer are intended to and shall not in any manner limit or qualify the liabilities and obligations assumed by Professional Engineer under this contract. The City of Nashua shall not maintain any insurance on behalf of Professional Engineer. Subcontractors are subject to the same insurance requirements as Professional Engineer and it shall be the Professional Engineer's responsibility to ensure compliance of this requirement.

Professional Engineer will provide the City of Nashua with certificates of insurance for coverage as listed below and endorsements affecting coverage required by the contract within ten calendar days after the City of Nashua issues the notice of award. The City of Nashua requires thirty days written notice of cancellation or material change in coverage. The certificates and endorsements for each insurance policy must be signed by a person authorized by the insurer and who is licensed by the State of New Hampshire. **General Liability and Auto Liability policies must name the City of Nashua as an additional insured** and reflect on the certificate of insurance. Professional Engineer is responsible for filing updated certificates of insurance with the City of Nashua's Risk Management Department during the life of the contract.

- All deductibles and self-insured retentions shall be fully disclosed in the certificate(s) of insurance.
- If aggregate limits of less than $2,000,000 are imposed on bodily injury and property damage, Professional Engineer must maintain umbrella liability insurance of at least $1,000,000. All aggregates must be fully disclosed on the required certificate of insurance.
- The specified insurance requirements do not relieve Professional Engineer of its responsibilities or limit the amount of its liability to the City of Nashua or other persons, and Professional Engineer is encouraged to purchase such additional insurance, as it deems necessary.

DRAFT

- The insurance provided herein is primary, and no insurance held or owned by the City of Nashua shall be called upon to contribute to a loss.
- Professional Engineer is responsible for and required to remedy all damage or loss to any property, including property of the City of Nashua, caused in whole or part by Professional Engineer or anyone employed, directed, or supervised by Professional Engineer.

12. **INDEMNIFICATION** Regardless of any coverage provided by any insurance, Professional Engineer agrees to indemnify and hold harmless the City of Nashua, its agents, officials, employees and authorized representatives and their employees from and against any and all suits, causes of action, legal or administrative proceedings, arbitrations, claims, demands, damages, liabilities, interest, attorney's fees, costs and expenses of any kind or nature in any manner caused, occasioned, or contributed to in whole or in part by reason of any negligent act, omission, or fault or willful misconduct, whether active or passive, of Professional Engineer or of anyone acting under its direction or control or on its behalf in connection with or incidental to the performance of this contract. Professional Engineer's indemnity, defense and hold harmless obligations, or portions thereof, shall not apply to liability caused by the sole negligence or willful misconduct of the party indemnified or held harmless.

13. **FISCAL CONTINGENCY** All payments under this contract are contingent upon the availability to the City of Nashua of the necessary funds. This contract shall terminate and the City of Nashua's obligations under it shall be extinguished at the end of any fiscal year in which the City of Nashua fails to appropriate monies for the ensuing fiscal year sufficient for the performance of this contract.

    Nothing in this contract shall be construed to provide Professional Engineer with a right of payment over any other entity. Any funds obligated by the City of Nashua under this contract that are not paid to Professional Engineer shall automatically revert to the City of Nashua's discretionary control upon the completion, termination, or cancellation of the agreement. The City of Nashua shall not have any obligation to re-award or to provide, in any manner, the unexpended funds to Professional Engineer. Professional Engineer shall have no claim of any sort to the unexpended funds.

14. **COMPENSATION** Review by the City of Nashua of Professional Engineer's submitted monthly invoice forms and progress reports for payment will be promptly accomplished by the City of Nashua. If there is insufficient information, the City of Nashua may require Professional Engineer to submit additional information. Unless the City of Nashua, in its sole discretion, decides otherwise, the City of Nashua shall pay Professional Engineer in full within **30 days of approval** of the submitted monthly invoice forms and progress reports.

15. **COMPLIANCE WITH APPLICABLE LAWS** Professional Engineer, at all times, shall fully and completely comply with all applicable local, state and federal laws, statutes, regulations, ordinances, orders, or requirements of any sort in carrying out the obligations of this contract, including, but not limited to, all federal, state, and local accounting procedures and requirements, all immigration and naturalization laws, and the Americans With Disabilities Act. Professional Engineer shall, throughout the period services are to be performed under this contract, monitor for any changes to the applicable laws, statutes, regulations, ordinances, orders, or requirements, shall promptly notify the City of Nashua in writing of any changes to the same relating to or affecting this contract, and shall submit detailed documentation of any effect of the change in terms of both time and cost of performing the contract.

DRAFT

16. **NONDISCRIMINATION** If applicable or required under any federal or state law, statute, regulation, order, or other requirement, Professional Engineer agrees to the following terms. Professional Engineer will not discriminate against any employee or applicant for employment because of physical or mental handicap in regard to any position for which the employee or applicant for employment is qualified. Professional Engineer agrees to take affirmative action to employ, advance in employment, or to otherwise treat qualified, handicapped individuals without discrimination based upon physical or mental handicap in all employment practices, including but not limited to the following: employment, upgrading, demotion, transfer, recruitment, advertising, layoff, termination, rates of pay, or other forms of compensation and selection for training, including apprenticeship.

    Without limitation of the foregoing, Professional Engineer's attention is directed to "Title 41"Public Contracts and Property Management" C.F.R. Subtitle B "Other Provisions Relating to Public Contracts" Section 60 "Office of Federal Contract Compliance Programs, Equal Employment, Department of Labor" which, by this reference, is incorporated in this contract.

    Professional Engineer agrees to assist disadvantaged business enterprises in obtaining business opportunities by identifying and encouraging disadvantaged suppliers, consultants, and sub consultants to participate to the extent possible, consistent with their qualification, quality of work, and obligation of Professional Engineer under this contract.

    In connection with the performance of work under this contract, Professional Engineer agrees not to discriminate against any employee or applicant for employment because of race, creed, color, national origin, sex, age, or sexual orientation. This agreement includes, but is not limited to, the following: employment, upgrading, demotion or transfer, recruitment or recruitment advertising, layoff or termination, rates of pay or other forms of compensation, and selection for training, including apprenticeship.

    Professional Engineer agrees, if applicable, to insert these provisions in all subcontracts, except for subcontracts for standard commercial supplies or raw materials. Any violation of any applicable provision by Professional Engineer shall constitute a material breach of the contract.

17. **ENDORSEMENT** Professional Engineer shall seal and/or stamp and sign professional documents including drawings, plans, maps, reports, specifications, and other instruments of service prepared by Professional Engineer or under its direction as required under the laws of the State of New Hampshire.

18. **ASSIGNMENT, TRANSFER, DELEGATION, OR SUBCONTRACTING** Professional Engineer shall not assign, transfer, delegate, or subcontract any rights, obligations, or duties under this contract without the prior written consent of the City of Nashua. Any such assignment, transfer, delegation, or subcontracting without the prior written consent of the City of Nashua is void. Any consent of the City of Nashua to any assignment, transfer, delegation, or subcontracting shall only apply to the incidents expressed and provided for in the written consent and shall not be deemed to be a consent to any subsequent assignment, transfer, delegation, or subcontracting. Any such assignment, transfer, delegation, or subcontract shall require compliance with or shall incorporate all terms and conditions set forth in this agreement, including all incorporated Exhibits and written amendments or modifications. Subject to the foregoing provisions, the contract inures to the benefit of, and is binding upon, the successors and assigns of the parties.

19. **CITY INSPECTION OF CONTRACT MATERIALS** The books, records, documents and accounting procedures and practices of Professional Engineer related to this contract shall be subject to inspection, examination and audit by the City of Nashua, including, but not limited to, the contracting agency, the Board of Public Works, Corporation Counsel, and, if applicable, the Comptroller General of the United States, or any authorized representative of those entities.

DRAFT

20. **DISPOSITION OF CONTRACT MATERIALS** Any books, reports, studies, photographs, negatives or other documents, data, drawings or other materials, including but not limited to those contained in media of any sort (e.g., electronic, magnetic, digital) prepared by or supplied to Professional Engineer in the performance of its obligations under this contract shall be the exclusive property of the City of Nashua and all such materials shall be remitted and delivered, at Professional Engineer's expense, by Professional Engineer to the City of Nashua upon completion, termination, or cancellation of this contract. Alternatively, if the City of Nashua provides its written approval to Professional Engineer, any books, reports, studies, photographs, negatives or other documents, data, drawings or other materials including but not limited to those contained in media of any sort (e.g., electronic, magnetic, digital) prepared by or supplied to Professional Engineer in the performance of its obligations under this contract must be retained by Professional Engineer for a minimum of four years after final payment is made and all other pending matters are closed. If, at any time during the retention period, the City of Nashua, in writing, requests any or all of the materials, then Professional Engineer shall promptly remit and deliver the materials, at Professional Engineer's expense, to the City of Nashua. Professional Engineer shall not use, willingly allow or cause to have such materials used for any purpose other than the performance of Professional Engineer's obligations under this contract without the prior written consent of the City of Nashua.

21. **PUBLIC RECORDS LAW, COPYRIGHTS, AND PATENTS** Professional Engineer expressly agrees that all documents ever submitted, filed, or deposited with the City of Nashua by Professional Engineer (including those remitted to the City of Nashua by Professional Engineer pursuant to paragraph 20), unless designated as confidential by a specific statue of the State of New Hampshire, shall be treated as public records and shall be available for inspection and copying by any person, or any governmental entity.

    No books, reports, studies, photographs, negatives or other documents, data, drawings or other materials including but not limited to those contained in media of any sort (e.g., electronic, magnetic, digital) prepared by or supplied to Professional Engineer in the performance of its obligations under this contract shall be the subject of any application for a copyright or patent by or on behalf of Professional Engineer. The City of Nashua shall have the right to reproduce any such materials.

    Professional Engineer expressly and indefinitely waives all of its rights to bring, including but not limited to, by way of complaint, interpleader, intervention, or any third party practice, any claims, demands, suits, actions, judgments, or executions, for damages or any other relief, in any administrative or judicial forum, against the City of Nashua or any of its officers or employees, in either their official or individual capacity of the City of Nashua, for violations of or infringement of the copyright or patent laws of the United States or of any other nation. Professional Engineer agrees to indemnify, to defend, and to hold harmless the City of Nashua, its representatives, and employees from any claim or action seeking to impose liability, costs, and attorney fees incurred as a result of or in connection with any claim, whether rightful or otherwise, that any material prepared by or supplied to Professional Engineer infringes any copyright or that any equipment, material, or process (or any part thereof) specified by Professional Engineer infringes any patent.

    Professional Engineer shall have the right, in order to avoid such claims or actions, to substitute at its expense non-infringing materials, concepts, products, or processes, or to modify such infringing materials, concepts, products, or processes so they become non-infringing, or to obtain the necessary licenses to use the infringing materials, concepts, products, or processes, provided that such substituted or modified materials, concepts, products, or processes shall meet all the requirements and be subject to all the terms and conditions of this contract.

DRAFT

22. **FINAL ACCEPTANCE** Upon completion of all work under the contract, Professional Engineer shall notify the City of Nashua in writing of the date of the completion of the work and request confirmation of the completion from the City of Nashua. Upon receipt of the notice, the City of Nashua shall confirm to Professional Engineer in writing that the whole of the work was completed on the date indicated in the notice or provide Professional Engineer with a written list of work not completed. With respect to work listed by the City of Nashua as incomplete, Professional Engineer shall promptly complete the work and the final acceptance procedure shall be repeated. The date of final acceptance of a project by the City of Nashua shall be the date upon which the Board of Public Works or other designated official accepts and approves the notice of completion.

23. **TAXES** Professional Engineer shall pay all taxes, levies, duties, and assessments of every nature due in connection with any work performed under the contract and make any and all payroll deductions required by law. The contract sum and agreed variations to it shall include all taxes imposed by law. Professional Engineer hereby indemnifies and holds harmless the City of Nashua from any liability on account of any and all such taxes, levies, duties, assessments, and deductions.

24. **NON-WAIVER OF TERMS AND CONDITIONS** None of the terms and conditions of this contract shall be considered waived by the City of Nashua. There shall be no waiver of any past or future default, breach, or modification of any of the terms and conditions of the contract unless expressly stipulated to by the City of Nashua in a written waiver.

25. **RIGHTS AND REMEDIES** The duties and obligations imposed by the contract and the rights and remedies available under the contract shall be in addition to and not a limitation of any duties, obligations, rights, and remedies otherwise imposed or available by law.

26. **PROHIBITED INTERESTS** Professional Engineer shall not allow any officer or employee of the City of Nashua to have any indirect or direct interest in this contract or the proceeds of this contract. Professional Engineer warrants that no officer or employee of the City of Nashua has any direct or indirect interest, whether contractual, noncontractual, financial or otherwise, in this contract or in the business of Professional Engineer. If any such interest comes to the attention of Professional Engineer at any time, a full and complete disclosure of the interest shall be immediately made in writing to the City of Nashua. Professional Engineer also warrants that it presently has no interest and that it will not acquire any interest, direct or indirect, which would conflict in any manner or degree with the performance of services required to be performed under this contract. Professional Engineer further warrants that no person having such an interest shall be employed in the performance of this contract. If City of Nashua determines that a conflict exists and was not disclosed to the City of Nashua, it may terminate the contract at will or for cause in accordance with paragraph 8.

    In the event Professional Engineer (or any of its officers, partners, principals, or employees acting with its authority) is convicted of a crime involving a public official arising out or in connection with the procurement of work to be done or payments to be made under this contract, City of Nashua may terminate the contract at will or for cause in accordance with paragraph 8. Upon termination, Professional Engineer shall refund to the City of Nashua any profits realized under this contract, and Professional Engineer shall be liable to the City of Nashua for any costs incurred by the City of Nashua in completing the work described in this contract. At the discretion of the City of Nashua, these sanctions shall also be applicable to any such conviction obtained after the expiration or completion of the contract.

    Professional Engineer warrants that no gratuities (including, but not limited to, entertainment or gifts) were offered or given by Professional Engineer to any officer or employee of the City of Nashua with a view toward securing a contract or securing favorable treatment with respect to the

DRAFT

awarding or amending or making of any determinations with respect to the performance of this contract. If City of Nashua determines that such gratuities were or offered or given, it may terminate the contract at will or for cause in accordance with paragraph 8.

The rights and remedies of this section shall in no way be considered for be construed as a waiver of any other rights or remedies available to the City of Nashua under this contract or at law.

27. **THIRD PARTY INTERESTS AND LIABILITIES** The City of Nashua and Professional Engineer, including any of their respective agents or employees, shall not be liable to third parties for any act or omission of the other party. This contract is not intended to create any rights, powers, or interest in any third party and this agreement is entered into for the exclusive benefit of the City of Nashua and Professional Engineer.

28. **SURVIVAL OF RIGHTS AND OBLIGATIONS** The rights and obligations of the parties that by their nature survive termination or completion of this contract shall remain in full force and effect.

29. **SEVERABILITY** In the event that any provision of this contract is rendered invalid or unenforceable by any valid act of Congress or of the New Hampshire legislature or any court of competent jurisdiction, or is found to be in violation of state statutes or regulations, the invalidity or unenforceability of any particular provision of this contract shall not affect any other provision, the contract shall be construed as if such invalid or unenforceable provisions were omitted, and the parties may renegotiate the invalid or unenforceable provisions for sole purpose of rectifying the invalidity or unenforceability.

30. **MODIFICATION OF CONTRACT AND ENTIRE AGREEMENT** This contract constitutes the entire contract between the City of Nashua and Professional Engineer. The parties shall not be bound by or be liable for any statement, representation, promise, inducement, or understanding of any kind or nature not set forth in this contract. No changes, amendments, or modifications of any terms or conditions of the contract shall be valid unless reduced to writing and signed by both parties.

31. **CHOICE OF LAW AND VENUE** This contract shall be governed exclusively by the laws of the State of New Hampshire and any claim or action brought relating to this contract, the work performed or contracted to be performed thereunder, or referable in anyway thereto shall be brought in Hillsborough County (New Hampshire) Superior Court Southern Judicial District or in the New Hampshire 9th Circuit Court—Nashua and not elsewhere.

DRAFT

Broad Street Parkway
Project Management and Engineering Services
Hayner/Swanson, Inc. Scope Fee Schedule

EXHIBIT B

Post-Construction Services & Project Closeout Support	Project Manager	Engineer	Constr. Observer	Senior Surveyor RLS	Survey Field Staff	CADD	Admin	Total
Rates	$150	$115	$75	$130	$75	$75	$60	
Task								
COORDINATION RELATED TO FEDERAL FUNDING								0
Continued coordination with DPW to finalize budetary totals, reimbursement requests and track federal funding	60						16	76
Continued coordination with respect to "Repurposing" BSP federal funds to other paving projects	24						4	28
								0
COORDINATION RELATED TO RIGHT OF WAY								0
Prepare Easement Plan for Easterly Remnant of Parcel 77A	1			3	8	4		16
Revise ROW Plan in area of Westerly Remnant of Parcel 77A	1			3	8	4		16
Monumentation of ROW at Parcel 77A					4			4
Prepare Parcel Plan & Easement for Parcel 6 (44 Broad St)	1			2				3
Prepare Parcel Plans for 2 Remnants of Boiler House Parcel	2			4		5		11
Prepare Parcel Plan for 3 Parcels (Hillcrest Avenue)	2			6	16	8		32
Revise Central Street ROW at 40 Pine Street	1			12	16	8		37
Coordinate with Appraiser		6						6
Coordinate with City & NHDOT - Appraisal Reports	3							3
Support related to sale of eligible parcels	12							12
Coordinate study of retaining wall parcel 60	8	4					2	14
								0
CONTRACT CLOSEOUT								
Coordination Related to Final Closeout - Parkway North								0
Complete compilation of Record Files	2	4					4	10
Allowance for coordination during NHDOT/FHWA audit	12	16					4	32
								0
Coordination Related to Final Closeout - River & Fairmount Street Bridges								0
Coordination during completion of punchlist work	8	16	16				4	44
Complete compilation of Record Files	8	40	6				6	60
Allowance for coordination during NHDOT/FHWA audit	12	16					4	32
Coordination related to snow fence on bridge	8	16	8				2	34
Coordination related to fence on retaining wall	8	16	12				2	38
								0
Coordination Related to Final Closeout - Parkway South								0
Coordination during completion of punchlist work	8	12	16					36
Complete compilation of Record Files	8	70	8				4	90
Allowance for coordination during NHDOT/FHWA audit	12	16					4	32
								0
Coordination Related to Final Closeout - Chimney Rehabilitation	4	8					2	14
Coordination Related to Final Closeout - Fire Pump Replacement	8	4					2	14

Broad Street Parkway
Project Management and Engineering Services
Hayner/Swanson, Inc. Scope Fee Schedule

ALLOWANCE FOR SUPPORT TO CITY - CLAIMS AND DISPUTES								
E D Swett Claim	60	20					8	88
Albanese Liquidated Damages	12						2	14
Parcel 75A BTLA Hearing	8						2	10
Parcel 212 Acquisition Cost	8						2	10
Parcel 73 Acquisition Cost	24							24
FINAL COORDINATION WITH UTILITIES								
Coordinate final relocation at Fairmount Street	4	8					2	14
FINAL COORDINATION - CULTURAL RESOURCES								
Pocket Park at Pine Street	8	12				8	2	30
Trees near Fairmount Street	8						2	10
Design Guidelines	8						2	10
Final Documentation - Coordinate with Historic Resources Consultant	12						4	16
FINAL COORDINATION MILLYARD								
Support Final cost sharing agreement	8	6					2	16
Allowance for other coordination	12	4					2	18
ALLOWANCE FOR GENERAL COORDINATION								
City Coordination Meetings	20						4	24
NHDOT Coordination Meetings	12						2	14
								0
Total Hours Budgeted	417	294	66	30	52	37	96	992
Total Dollars Budgeted	$62,550	$33,810	$4,950	$3,900	$3,900	$2,775	$5,760	$117,645
Allowance For Expenses								$1,500
Total								**$119,145**